SECTION A

SERVICE MANUAL

LOW PRESSURE
PORTABLE FORCED AIR HEATER

HOT SURFACE IGNITION MODELS

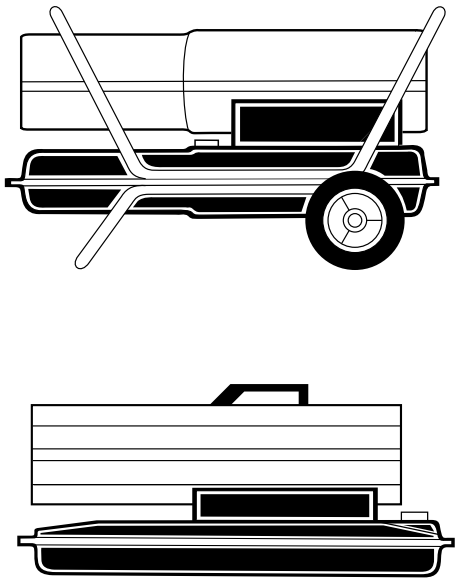

SAFETY INFORMATION

⚠ WARNINGS

IMPORTANT: Read this owner's manual carefully and completely before trying to assemble, operate, or service this heater. Improper use of this heater can cause serious injury or death from burns, fire, explosion, electrical shock, and carbon monoxide poisoning.

⚠ DANGER: Carbon monoxide poisoning may lead to death!

Carbon Monoxide Poisoning: Early signs of carbon monoxide poisoning resemble the flu, with headaches, dizziness, and/or nausea. If you have these signs, the heater may not be working properly. **Get fresh air at once!** Have heater serviced. Some people are more affected by carbon monoxide than others. These include pregnant women, persons with heart or lung disease or anemia, those under the influence of alcohol, and those at high altitudes.

Make certain you read and understand all warnings. Keep this manual for reference. It is your guide to safe and proper operation of this heater.

- Use only kerosene or No. 1 fuel oil to avoid risk of fire or explosion. Never use gasoline, naphtha, paint thinners, alcohol, or other highly flammable fuels.
- Fueling
  - a) Personnel involved with fueling shall be qualified and thoroughly familiar with the manufacturer's instructions and applicable federal, state, and local regulations regarding the safe fueling of heating units.
  - b) Only the type of fuel specified on the heater's data plate shall be used.
  - c) All flame, including the pilot light, if any, shall be extinguished and the heater allowed to cool, prior to fueling.
  - d) During fueling, all fuel lines and fuel-line connections shall be inspected for leaks. Any leaks shall be repaired prior to returning the heater to service.
  - e) At no time shall more than one day's supply of heater fuel be stored inside a building in the vicinity of the heater. Bulk fuel storage shall be outside the structure.
  - f) All fuel storage shall be located a minimum of 25 feet from heaters, torches, welding equipment, and similar sources of ignition (exception: the fuel reservoir integral with the heater unit).
  - g) Whenever possible, fuel storage shall be confined to areas where floor penetrations do not permit fuel to drip onto or be ignited by a fire at lower elevation.
  - h) Fuel storage shall be in accordance with the federal, state, or local authority having jurisdiction.
- Never use heater where gasoline, paint thinner, or other highly flammable vapors are present.
- Follow all local ordinances and codes when using heater.
- Heaters used in the vicinity of tarpaulins, canvas, or similar enclosure materials shall be located a safe distance from such materials. The recommended minimum safe distance is 10 feet. It is further recommended that these enclosure materials be of a fire retardant nature. These enclosure materials shall be securely fastened to prevent them from igniting or from upsetting the heater due to wind action.
- Use only in well-vented areas. Before using heater, provide at least a three-square-foot opening of fresh, outside air for each 100,000 Btu/Hr of rating. This heater produces carbon monoxide, which is listed by the State of California as a reproductive toxin under Proposition 65.
- Use only in places free of flammable vapors or high dust content.
- Use only the electrical voltage and frequency specified on model plate.
- Use only a three-prong, grounded extension cord.
- Minimum heater clearances from combustibles:

  Outlet: 8 Ft. Sides: 4 Ft. Top: 4 Ft. Rear: 4 Ft.
- Locate heater on a stable and level surface if heater is hot or running or a fire may occur.
- When moving or storing heater, keep heater in a level position or fuel spillage may occur.
- Keep children and animals away from heater.
- Unplug heater when not in use.
- When used with thermostat, heater may start anytime.
- Never use heater in living or sleeping areas.
- Never block air inlet (rear) or air outlet (front) of heater.
- Never move, handle, refuel, or service a hot, operating, or plugged-in heater.
- Never attach duct work to front or rear of heater.
- Approved by the New York City Fire Department under certificate of approval #4803, #4860, #4908, or #4909. To be used only at construction sites in accordance with applicable New York City Codes, Regulations, Rules, Directives, Permits, etc.
- **Warning to New York City Residents** For Use Only At Construction Sites in accordance with applicable NYC codes under NYCFD certificate of approval #4803, #4899, #4908, #4909, or #4934.

TABLE OF CONTENTS

General Information

I. Arrangement of Manual 3
II. Technical Service Department 3
III. Service Preparation 3
IV. Tools Required 4
V. Parts 4

Specifications

I. General Specifications
1. Fuel Selection 5
2. Electrical 5
3. Ventilation 5
4. Heater Sizing 5
II. Heater Performance Specifications 6

Component Operation

I. Air System
1. Air Pump 7
2. Air Filters 7
3. Nozzle 7
II. Electrical System
1. Motors 7
2. Ignition Control/Photocell 8
3. Hot Surface Ignitor 8
III. Fuel System 8
IV. Combustion System 9
V. All Systems Working Together 9

Troubleshooting

I. Safety Requirements 10
II. Cautions 10
III. Using The HA1170 Tester
1. Operation 10
2. Calibration 10
IV. Diagnostic Charts 10

Wiring Diagrams 23

GENERAL INFORMATION

I. ARRANGEMENT OF MANUAL

This manual contains information and service procedures to assist the service technician in understanding and correcting problems on DESA International oil-fired portable forced air heaters. The first section of the manual contains basic information concerning the operation of the different components in the heater. This information should be reviewed by service personnel to provide a basic understanding of how the components function in the working system. The *Troubleshooting* section of this manual is intended to provide a quick reference concerning conditions which result in customer complaints. These procedures will help the service technician quickly diagnose a malfunctioning heater. The illustrations in this manual may not necessarily depict the actual heater model, and are intended for reference ONLY.

II. TECHNICAL SERVICE DEPARTMENT

The Technical Service Department, located in Bowling Green, Kentucky, is committed to assisting our Authorized Service Centers to increase their service knowledge, so that they can provide prompt, efficient service. This Service Manual covers the majority of problems that are associated with the heaters. However, as with any product, certain problems can arise which have not been covered. If such problems arise, please call the Technical Service Department's number, 1-800-323-5190, or visit our website at www.desatech.com, to address these technical problem areas. If you need assistance for ordering parts, billing questions, etc. you should contact 1-800-432-5212.

III. SERVICE PREPARATION

A clean work area at the start of each job is essential for efficient service work. Heaters which are extremely dirty should be cleaned prior to service. Cleaning will occasionally uncover the problem area. Tools needed for the job should be obtained before work is started. Delays resulting from locating tools result in lost time and wages.

Clean fuel should always be used when testing heaters. Many problems are often traced to the use of the wrong type of fuel or dirty fuel.

Use caution and common sense when working on a heater. Always remember that kerosene is flammable, and electrical parts can result in potential shock. Heater parts are hot during operation, which could result in burns.

IV. TOOLS REQUIRED

In addition to common hand tools, the service shop should have the following tools and instruments for proper repairing of the heaters. These instruments will be referred to throughout this manual.

INSTRUMENT	RANGE	PART NUMBER
Control/Photocell Tester	N/A	HA1170
Pressure Gauge	0-15 P. S. I.	HA1180
Feeler Gauge	.001 to .1 inch	None*
Multimeter	0-250 VAC 0-200 Ohm	None**

*Available at any auto parts store.
**Available at most electronic stores.

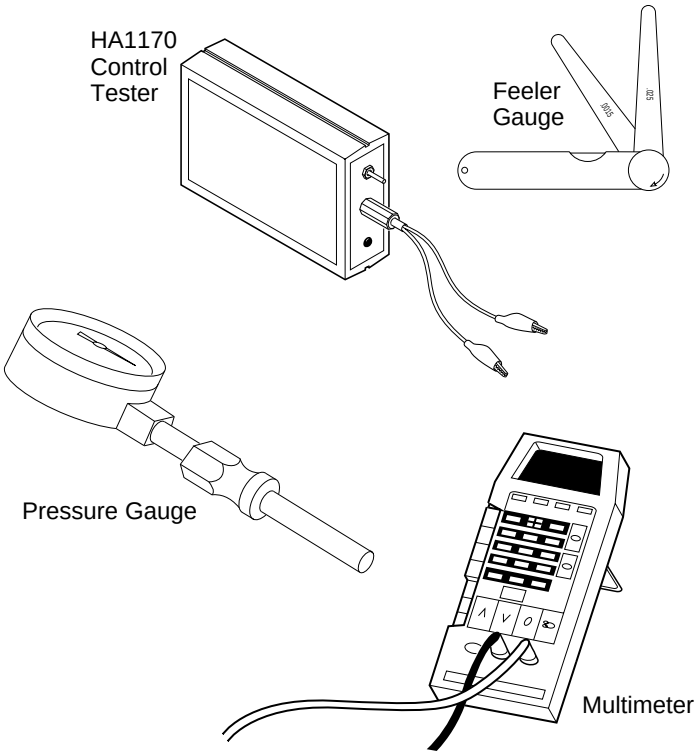

V. PARTS

In addition to the standard parts we now offer parts kits. Listed below are the item numbers and the accessory description

ITEM NUMBER	ACCESSORY
HA1176A	Parts Kit/All Models
HA1180	Air Gauge/All Models
HA1210	Thermostat/Forced Air & LP Forced Air
HA1202	Heavy Duty Wheel Kit Fits: 35, 40, 50, 55, 60, 70 Models
HA1206	Wheel Kit Fits: 35, 40, 50, 55, 60, 70 Models
HA2203	Rear Handle Fits: 110, 115 Models
HA2204	Rear Handle Fits: 150, 155, 165, 200 Models
HA2210	Filler Neck Screen
ITEM NUMBER	**REPLACEMENT PART**
104068-03	Ignition control Fits: 35, 40, 50, 55, 60 Models
104068-02	Ignition control Fits: 70, 110, 115, 150, 155, 165, 200 Models
HA3004	Rotor Kit 1/2"
HA3006	Nozzle (35, 40 Models)
Refer to Owner's Manual	Nozzle (50/55 Models)
HA3024	Nozzle (60 Models)
HA3026	Nozzle (70 Models)
HA3027	Nozzle (110, 115 Models)
HA3028	Nozzle (150, 155 Models)
HA3029	Nozzle (165 Models)
100735-31	Nozzle (200 Models)
102548-03	Hot Surface Ignitor
HA3014	Air Filter Kit (35, 40, 50, 55, 60, 70 Models)
HA3017	Filter Kit (110, 115, 150, 155, 165, 200 Models)
HA3005	Rotor Kit 5/8"
M16656-24	Photocell
HA3020	Pump Adjustment Kit

SPECIFICATIONS

I. GENERAL SPECIFICATIONS

1. Fuel Selection

One of the most critical specifications for trouble-free operation is the use of a clean, acceptable fuel. Listed below are guidelines and comments concerning operation of heaters with different fuels.

RECOMMENDED FUELS	COMMENTS
Kerosene Fuel Oil No.1 Jet "A"	Best overall results. Minimum odor and minimum maintenance. No additives necessary for cold weather operation.

ALTERNATE FUELS	COMMENTS
Fuel Oil No. 2 Diesel No. 1 Diesel No. 2	Noticeable increase in odor. Requires frequent maintenance of fuel filter and nozzle. Requires a winterizing additive at temperatures below 20°F

2. Electrical

The heater must be connected to a standard electrical outlet (120V/60HZ). For safety, all heaters are equipped with a three prong power cord, which must be grounded. When selecting an extension cord for heater usage, the following chart should be used in determining wire size.

LENGTH OF CORD	WIRE SIZE (AWG)
100 Ft.	No. 14
200 Ft.	No. 12
300 Ft.	No. 10
400 Ft.	No. 8
	No. 6

3. Ventilation

The heater should be used only in well-ventilated areas. As a rule, the following minimum requirements should be followed.

HEATER SIZE (BTU)	SQUARE FOOT OPENING
35,000/40,000	1.0 Sq. Ft.
50,000/55,000/60,000	1.6 Sq. Ft.
70,000	2.1 Sq. Ft.
110,000/115,000	3.2 Sq. Ft.
150,000/155,000	4.5 Sq. Ft.
165,000	5.0 Sq. Ft.
200,000	6.0 Sq. Ft.

The above is based on ventilation requirements of at least a 3 sq. ft. opening per 100,000 BTU. If possible, it is better to provide cross-ventilation to achieve better air movement.

4. Heater Sizing

The user should be aware of the proper size heater needed for a particular application. It is easy to see that a 35,000 BTU heater would not heat a large warehouse, but the question is sometimes asked "What size heater should I use?" A simple formula that can be used to determine heater BTU requirements follows:

Cu. Ft. of Area X .133 X Desired Temp. Rise °F = BTU Size Needed.

Example:
Area: 50' X 25' X 10' = 12,500 Cu. Ft.
Desired Temp. Rise: 30°F

12,500 (Cu. Ft.)
X .133 (Factor)
1662.5
X 30 (Temp. Rise)
49,875 (Proper Heater Size)

ANSWER: A 50,000 BTU heater should be selected for this application.

II. HEATER PERFORMANCE SPECIFICATIONS

Technical Service Heater Performance Data

Heater Model	BTU Rating	Pump PSI ± .1	Nozzle Part No.	Nozzle GPH ± 5%	Motor Part No.	Motor R.P.M.	Motor Horsepower	Ignitor Kit	Control Board	Fuel Tank Capacity (Gal)	Hot Air Output (C.F.M.)	AMPS (Running)
R35D REM35C	35,000	3.0	100735-02 (HA3006)	0.30	100088-01 (102001-01)	1725	1/15	102548-03	104068-03	3.0	165	2.0
R40 REM40	40,000	3.0	100735-02 (HA3006)	0.30	100088-01 (102001-01)	1725	1/15	102548-03	104068-03	3.0	170	2.0
R55A REM55A	55,000	3.6	100735-17 (HA3024)	0.40	100088-01 (102001-01)	1725	1/15	102548-03	104068-03	5.0	175	2.0
R60 REM60 RM60	60,000	3.4	100735-17 (HA3024)	0.40	100088-01 (102001-01)	1725	1/15	102548-03	104068-03	5.0	180	2.0
R70D R70DT	70,000	4.7	100735-18 (HA3026)	0.50	103609-01 (102001-20)	3450	1/8	102548-03	104068-02	5.0	250	2.8
R110B R110BT	110,000	5.3	100735-19 (HA3027)	0.80	103493-01 (102001-21)	3450	1/5	102548-03	104068-02	9.0	490	3.6
R115 REM115 RM115	115,000	5.3	100735-19 (HA3027)	0.80	103493-01 (102001-21)	3450	1/5	102548-03	104068-02	9.0	490	3.6
REM150E	150,000	5.4	100735-20 (HA3028)	1.10	103493-01 (102001-21)	3450	1/5	102548-03	104068-02	13.5	550	3.6
R155B REM155B RM155	155,000	5.4	100735-20 (HA3028)	1.10	103493-01 (102001-21)	3450	1/5	102548-03	104068-02	13.5	550	3.6
R165AT	165,000	5.6	100735-21 (HA3029)	1.20	103493-01 (102001-21)	3450	1/5	102548-03	104068-02	13.5	575	3.6
R200A	200,000	6.2	100735-31	1.40	105183-01 (102001-27)	3400	1/4	102548-03	104068-02	13.5	600	3.6

M16656-24 Photocell will apply to all models for service.

COMPONENT OPERATION

I. AIR SYSTEM

1. Air Pump

The heater's air pump consists of a rotor with four carbon blades rotating inside a pump body. The rotor is driven directly by the motor and is attached to the motor shaft by means of a plastic insert. As the motor rotates, the carbon blades travel outward rubbing against the inside surface of the steel pump body. The rotor's position inside the pump body is such that it is not concentric with the pump body and a .003/.004 of an inch gap is set at the uppermost quadrant. As the motor rotates, the air between the blades is compressed and routed to the nozzle through the air line.

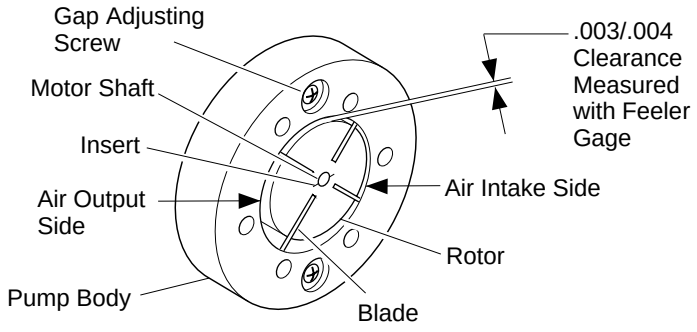

Direction of Rotation-Clockwise

2. Air Filters

The air filtering system consists of an air input filter and an air output filter. The air input filter is located at the right rear of the motor and its purpose is to filter all incoming air prior to entering the air pump. The filter design is such that it can be cleaned in a mild, soapy solution, thoroughly dried and used over again. The air output filter is located under the plastic end cover. This filter's purpose is to prevent any carbon dust (from rotor or blade wear) from entering the air passages in the nozzle. This filter is non-cleanable and should be replaced when considerable buildup of carbon dust is observed. (See drawings below).

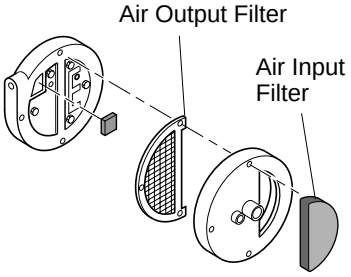

35,000, 50,000, 55,000, and 70,000 BTU Filter System

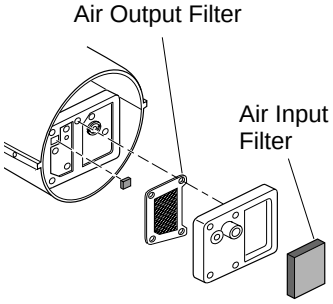

110,000, 115,000, 150,000, 155,000, 165,000, and 200,000 BTU Filter System

3. Nozzle

As mentioned previously, the purpose of the air pump is to compress air and deliver it to the nozzle. The compressed air, as it travels through the nozzle, creates a negative pressure that extends back through the center of the nozzle. This negative pressure lifts the fuel from the fuel tank. The fuel from the fuel tank and the compressed air are mixed at the nozzle which results in a very fine mist of fuel being sprayed into the combustion chamber. The air pump/nozzle combination eliminates the need for a conventional type fuel pump. It is important for the service technician to understand the nozzle operation. In many cases concerning improper operation of a heater, the problem is the result of a seal leak or a restriction (dust/dirt) being present within the nozzle. It should also be pointed out that each model heater requires different nozzles due to different fuel flow rates.

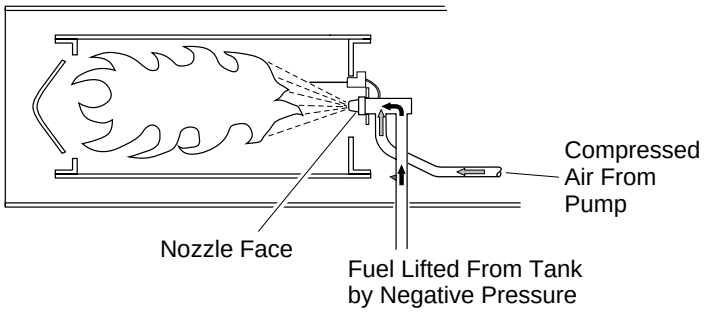

II. ELECTRICAL SYSTEM

1. Motors

The motors used on the low pressure heaters are fractional horsepower motors ranging from 1/15 HP on the smallest heater to 1/4 HP on the largest heaters. The motors used can be grouped into two categories. The first category is the shaded pole motor. The shaded pole motor contains a single winding and does not require an integral start/run capacitor for operation. This type of motor is used on 35, 40, 50, 55, and 60 model heaters.

The second category is the permanent start capacitor motor. This motor contains two separate windings. The first winding being the auxiliary or start winding and the second being the main or run winding. This motor utilizes an integral start/run capacitor which is wired internally and cannot be replaced. This type of motor is used on the 70, 110, 115, 150, 155, 165, and 200,000 Btu models.

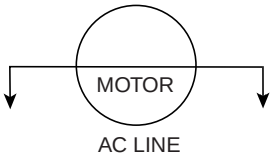

Shaded Pole Motor

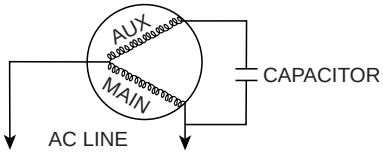

Permanent Start Capacitor Motor

2. Ignition Control/Photo Cell

The ignition control circuit consists of a photocell (light sensitive resistor) and an ignition control. The photocell is used to sense the presence of light inside the combustion chamber. The resistance of the photocell changes as the light level inside the combustion chamber changes. When the heater is operating properly, the flame pattern inside the combustion chamber is very turbulent which results in the resistance of the photocell increasing and decreasing very rapidly. This dynamic change in resistance is required by the ignition control to allow the heater to continue to operate. If the signal from the photocell becomes “lazy” or steady state indicating a lack of turbulence, then the heater will be turned off. Some examples of this condition are a loss of fan and a blocked inlet. Because the photocell also responds to the color of the flame, the control will also shut off the heater if the fuel/air mixture is too lean. With a fuel lean mixture the flame becomes blue in color and the photocell does not respond to that end of the light spectrum as well as it responds to orange light which is present during proper operation. As a service technician, it is important to understand the operation of the ignition control. In the past, it has been the single most misdiagnosed part of the heater. It is suggested that all controls be checked per instructions listed in the *Troubleshooting* section, prior to replacement.

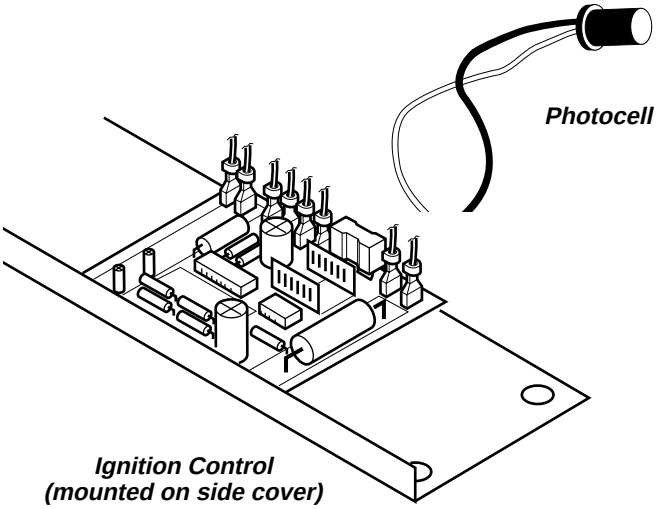

3. Hot Surface Ignitor

All models will use 102548-03 Ignitor Kit.

The hot surface ignitor is rated for 120 volts. With the rated voltage applied, the ignitor element heats up to 1400º Celsius (2550º Fahrenheit) within 5 seconds. When the atomized fuel is sprayed by the nozzle it is ignited by this extremely hot surface.

Note: It is important for the service technician to be cautious when working with the hot surface ignitor due to its extremely high operating temperature. Care should also be taken not to bend or strike the ignitor element.

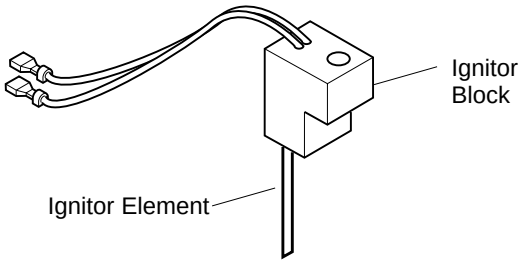

III. FUEL SYSTEM (FUEL FILTERS)

There are several types of fuel filters used on different model heaters. The filters are always located in line with the fuel pickup tube. The purpose of the filter is to eliminate the possibility of dirt, dust, etc. from entering the nozzle and restricting the flow. The filters should be inspected and cleaned whenever a heater is brought in for service. It is also important that the bottom of the tank be inspected for sedimentation or dirt buildup. The filter’s design is such that a possible restriction in the filter screen can be present during operation and be dislodged back into the tank when the heater is shut off.

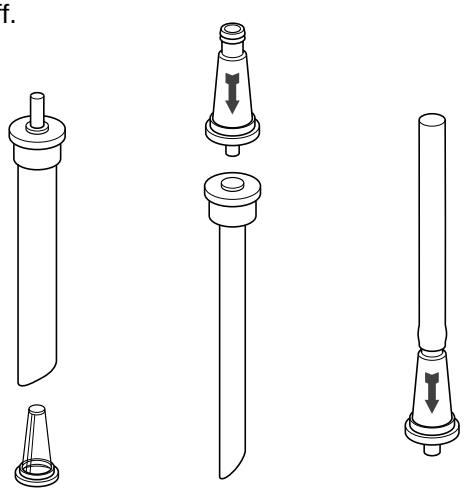

35, 40, 50, 55, 60, and 70,000 Btu Models

110, 115, 150, 155, and 165,000 Btu Models

200,000 Btu Model

IV. COMBUSTION SYSTEM

Air being blown by the fan is directed by the air deflectors into the combustion chamber through the two louvers and center opening in the rear head which is riveted to the back of the combustion chamber. The nozzle and nozzle adapter are mounted in the burner strap which is fastened to the rear head. As the atomized fuel exits the nozzle and is ignited it mixes with the air entering through the rear head. The combustion process is completed inside the combustion chamber and the hot air exits the outlet end of the chamber.

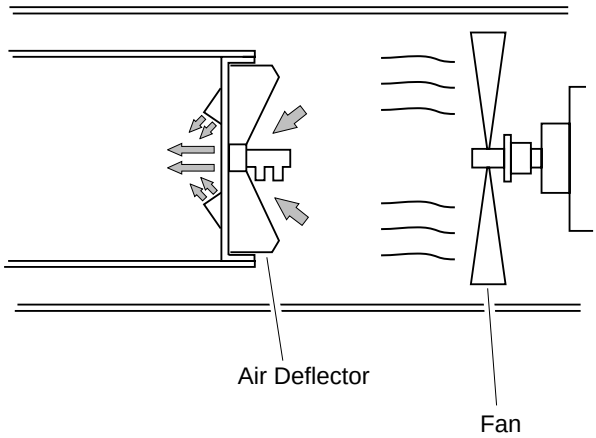

V. ALL SYSTEMS WORKING TOGETHER

There are four basic systems within the heater: the fuel system, the air system, the electrical system, and the combustion system.

An air pump (A) on one end of the motor shaft forces air through the air line (G) and out the nozzle (I). The moving air creates a pressure differential in the nozzle adapter (N) causing fuel to be drawn from the tank (J). The fuel-air mixture is sprayed into the combustion chamber (L) in a fine mist.

Additional air is supplied to the combustion chamber by a fan (O) to enter the combustion chamber where it mixes with the air and fuel from the nozzle. The remaining air is directed around and over the combustion chamber. This air mixes with the heated air from the combustion chamber and is ejected as a jet of clean, heated air (K).

The ignition system consists of an ignition control assembly (E) and hot surface ignitor (M). The ignition control assembly applies 120 volt power to the hot surface ignitor for 10 seconds which consists of a 5 second preheat period and a 3 to 4 second ignition trial period. The extremely high temperature of the ignitor element ignites the fuel and air mixture within the combustion chamber. After the trial period the power is removed from the ignitor.

In the safety circuit, the photocell monitors the amount of flame turbulence inside the combustion chamber.

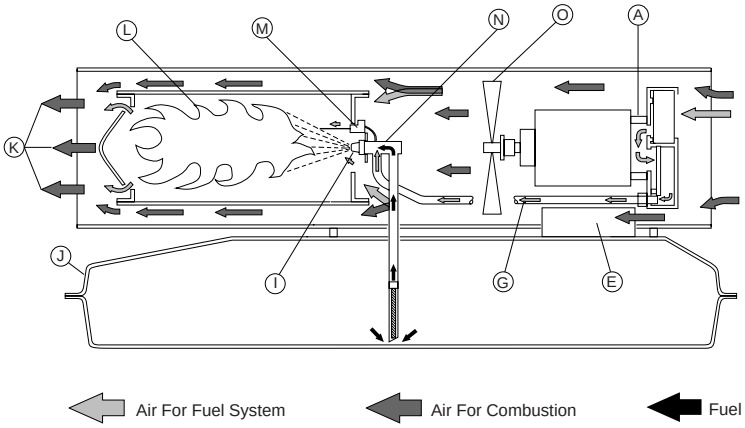

TROUBLESHOOTING

I. SAFETY REQUIREMENTS

This service manual is intended for use by individuals with an adequate knowledge of electrical and mechanical skills. Attempts to repair this heater by individuals without those skills can result in personal injury, as well as property damage.

II. CAUTIONS

1. Before servicing, disconnect the heater from the electrical power source by removing the electrical plug from the wall receptacle.

   Note: When certain tests require electrical power to be applied, connect electrical power only for the time necessary to complete the test.
2. Do not bypass safety devices except when instructed to do so during troubleshooting procedures.
3. If replacement parts are necessary, do not substitute with non-factory parts (use only factory authorized replacement parts).
4. Make sure all electrical connections are secure and correct prior to connecting heater to a grounded electrical power source.

III. USING THE HA1170 TESTER

The HA1170 control/photocell tester provides a means of troubleshooting the forced air kerosene heater by verifying the operation of the ignition control and photocell.

Operation

The tester's toggle switch has three positions. The middle position puts the tester in the OFF mode. The switch should be kept here when the tester is not in use to conserve battery power. With the switch in the ON position, the red LED is on continuous. This 2 foot-candle light source can be used to test the static resistance of the photocell. With the switch in the PULSE position, the red LED flashes off and on at a rate of 10 times per second (10 hertz). This position is used to verify the proper operation of the ignition control.

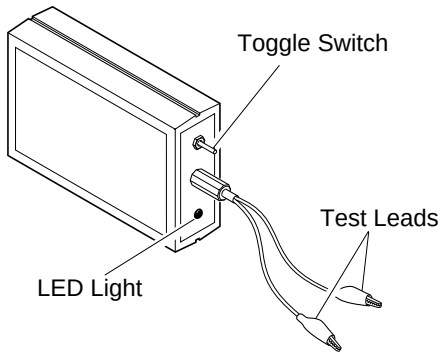

HA1170 Tester

Calibration

IMPORTANT: This tester will not function properly without adequate battery power. Prior to using the tester, the full load battery voltage must be verified as follows.

Remove the battery cover to expose the battery and terminals. With the battery connected and the switch in the ON position (LED on continuous), measure the D.C. voltage across the battery terminals. If this voltage reads 7.5 volts or higher, proceed with testing. If the voltage reads lower than 7.5 volts, replace the battery and confirm the full load voltage.

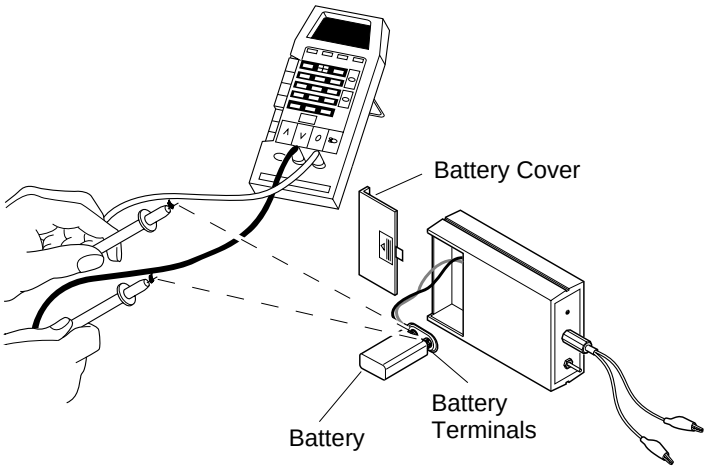

IV. DIAGNOSTIC CHARTS

The following pages contain various diagnostic charts. To use the charts, find the "Observed Fault" that exists and follow test procedure.

Observed Fault Index

Motor starts and runs but fuel does not ignite 11

Ignitor element heats up but motor does not start within five seconds 14

Ignitor does not heat up and motor does not start within five seconds 17

Ignitor heats up, motor starts and runs, and fuel ignites, but heater shuts off after a short period of time 18

Delayed Ignition 22

OBSERVED FAULT

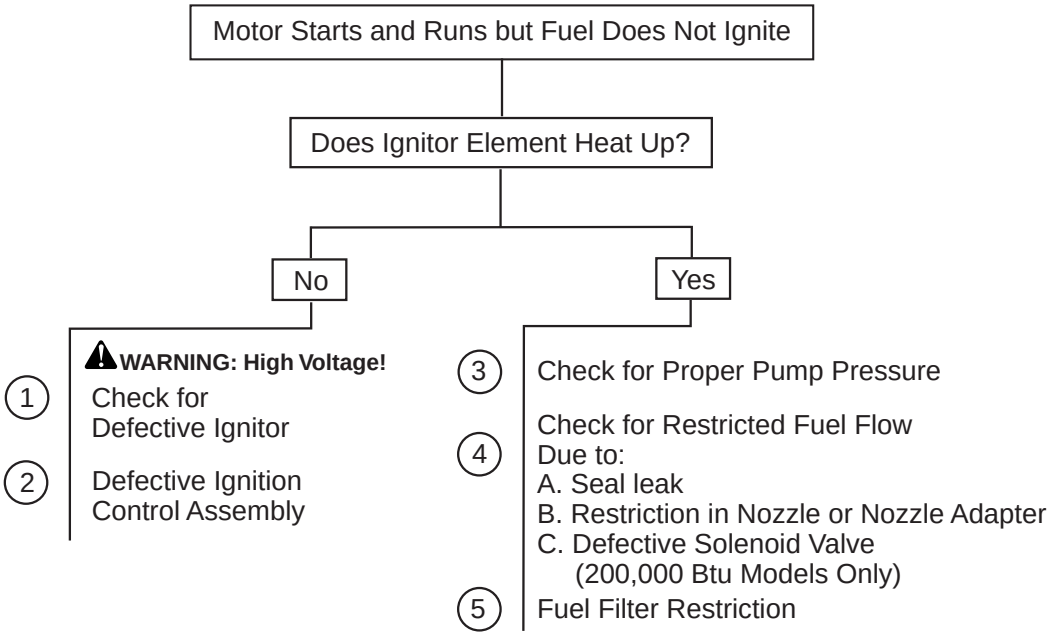

TEST PROCEDURE

1 Check Ignitor

Disconnect ignitor wires from ignition control assembly. Measure the resistance of the ignitor at the terminals with an ohmmeter (use 0-200 OHM scale). Ignitor resistance should measure 30 to 175 OHMS. If resistance measures outside of this range, then ignitor is defective and should be replaced.

2 Check Ignition Control Assembly

Remove fuse cover and check fuse (70,000 to 200,000 Btu models only). If fuse is blown replace it with a GMA-10 fuse. Disconnect motor red and white wires from control. With Ignitor wires disconnected, attach voltmeter leads to the ignitor terminals (labeled IGNITOR). Use the 0 to 200 V.A.C. scale. Plug power cord into a grounded 120V/60 Hz outlet. Meter should read 120V(rms) for approximately 10 seconds. If voltage reads 0 or stays at 120 for more than 10 seconds, the control is defective and should be replaced.

WARNING: High Voltage!

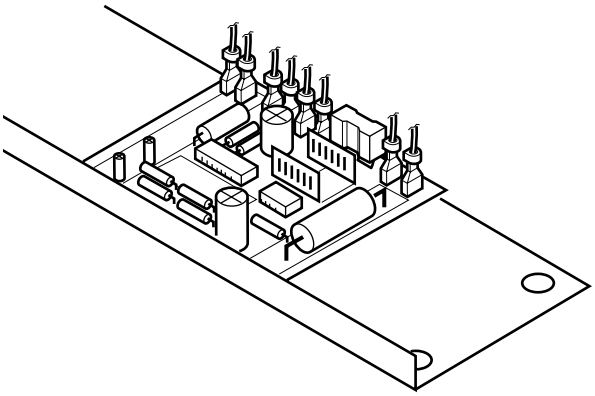

Ignition Control

③ Check for Proper Pump Pressure

Install HA1180 Pressure Gauge or equivalent to rear of air filter housing. Start heater and adjust air pressure to specified pressure. Turn adjustment screw clockwise to increase pressure and counterclockwise to decrease pump pressure. The screwdriver must be removed from the slot after any adjustment before taking a reading on the gauge. (See *Heater Performance Specification* on page 6 for specified pressures).

Note: Pressure gauge must be scaled in 1/4 pound increments for accurate measurement.

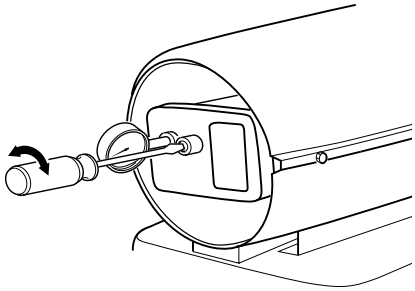

④ Check for Restricted Fuel Flow

35,000 to 165,000 Btu Models Remove air and fuel lines from nozzle adapter. Remove nozzle adapter/nozzle from bracket.

200,000 Btu Model Remove ignitor (do not strike or bend element) from bracket. Place in a safe location. Remove air and fuel lines from nozzle adapter. Remove two bracket screws and remove bracket, nozzle adapter, and nozzle assembly from combustion chamber.

Using a 5/8" socket wrench, carefully remove the nozzle from nozzle adapter. (Be extremely careful not to scratch or score the face of the nozzle).

A. Seal Leak

Inspect nozzle seal or o-ring for damage. Replace if necessary.

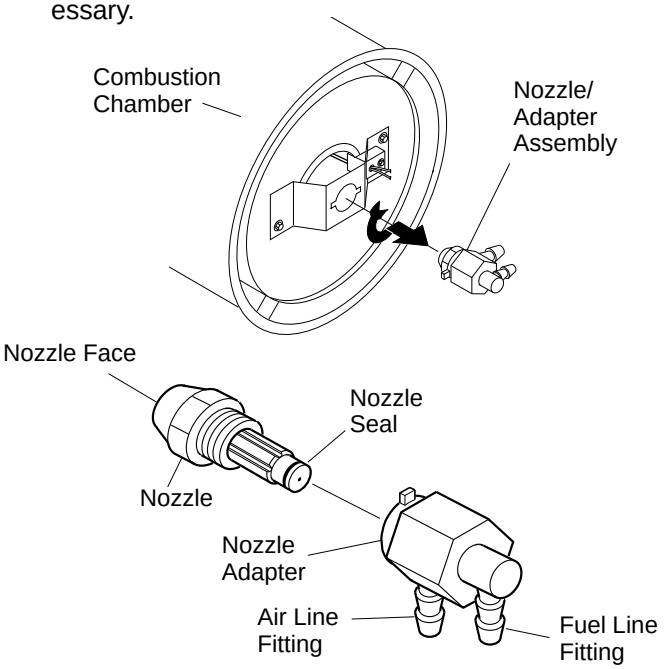

35,000 - 165,000 Btu Models

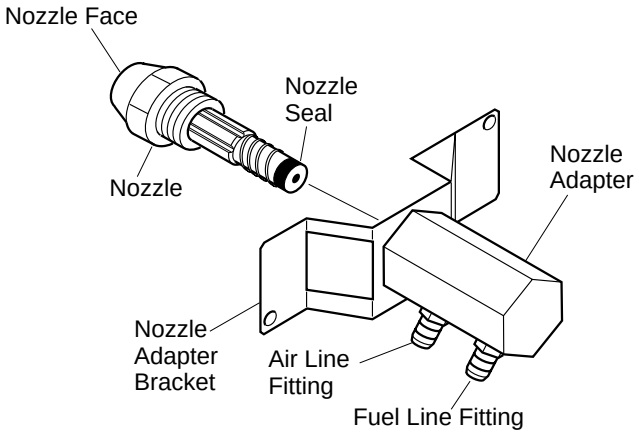

200,000 Btu Models

B. Restriction in Nozzle or Nozzle Adapter

Using a compressed air source, blow the compressed air through the outlet end of nozzle to dislodge any foreign debris.

CAUTION: NEVER DRILL OUT OR TRY TO INCREASE NOZZLE SIZE.

Also, blow compressed air through the nozzle adapter in the direction shown to dislodge any foreign debris.

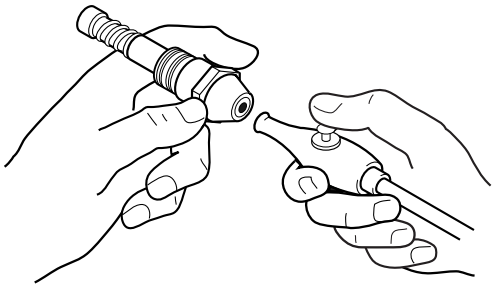

Blowing Compressed Air Through Nozzle

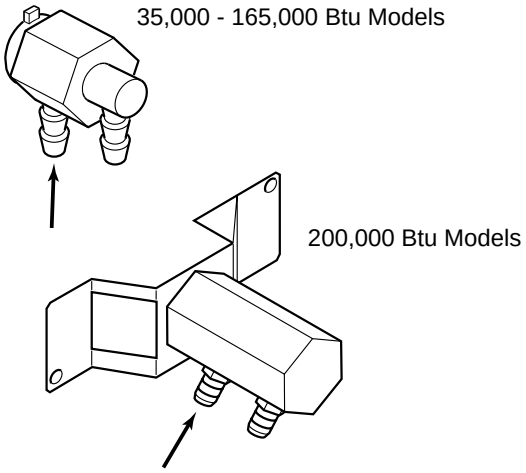

Blowing Compressed Air Through Nozzle Adapter

C. Defective Solenoid Valve (200,000 Btu model only)

Remove upper and lower fuel lines from fittings on solenoid valve. Apply 120V/60 Hz power to valve. Shine a flashlight at one side of valve. Light should be visible from the other side when the solenoid is energized. If not, the valve is obstructed or defective. Clean or replace as necessary.

5 Fuel Filter Restriction

The fuel filter should be inspected and cleaned (see section III, *Fuel System (Fuel Filters),* page 8. After removing filter, flush with clean kerosene in the reverse direction of the fuel flow.

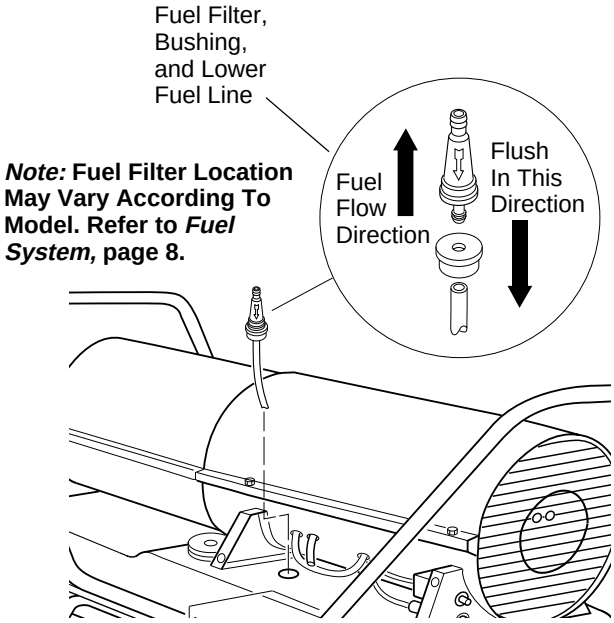

***Note:* Fuel Filter Location May Vary According To Model. Refer to *Fuel System,* page 8.**

100,000 - 165,000 Btu Models Shown

OBSERVED FAULT

Ignitor Element Heats Up But Motor Does Not Start Within Five Seconds

Rotate Fan by Hand to Determine if Fan Rotates Easily

Fan is Difficult to Rotate

1. Broken Rotor or Blades
2. Improper Rotor Clearance
3. Oversized Rotor
4. Dry Motor Bearing

Fan Rotates Easily by Hand

5. Open Motor Winding
6. Defective Ignition Control Assembly
7. Defective Start/Run Capacitor
8. Improper Voltage to Heater

TEST PROCEDURE

1 Broken Rotor or Blades

Disassemble the end cover filter and end pump cover from rear of motor. Visually inspect the rotor and blades for breakage. Make sure that the rotor and blades are free of any type of lubricant. Rotor and blades must be clean and dry for proper operation.

2 Improper Rotor Clearance

Check rotor with feeler gauge for proper clearance (.003"-.004") between rotor and pump body. Rotate rotor and make sure all four quadrants of rotor have adequate clearance.

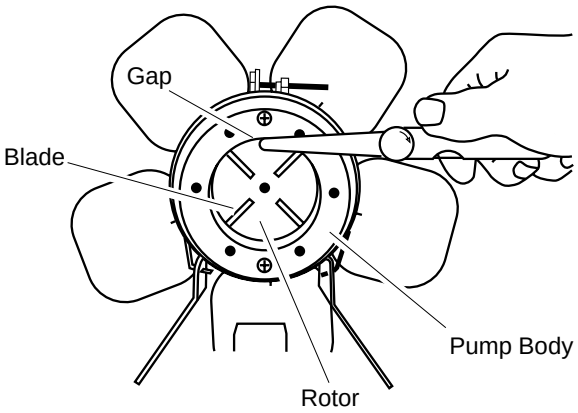

3 Oversized Rotor

If the fan is hard to turn when the motor end cover is installed, but easy to turn when loosened, the rotor should be removed and lightly sanded. Remove the rotor and lightly sand by placing rotor in the palm of hand and sanding on a flat surface making figure eight rotations. (Use the finest grade of sandpaper available).

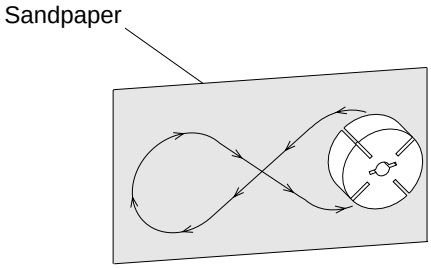

4 Dry Motor Bearing

If the fan is difficult to turn with air pump parts removed, then motor bearings are defective. Bearings are permanently lubricated, therefore motor should be replaced.

5 Open Motor Windings

Disconnect motor wires (red and white) from ignition control assembly. Attach the ohmmeter leads to the moter wire terminals. Using the 0 to 200 OHM scale, measure the resistance of the motor windings. Refer to the chart below for resistances for each model. If the resistance is not within the specified range motor is defective and should be replaced.

NOTE: Resistances may vary due to motor temperature.

MOTOR WINDING RESISTANCE	
MODEL	RESISTANCE RANGE (OHMS)
35,000, 50,000, 55,000, 60,000	5.57-6.81
70,000	6.03-7.37
100,000, 110,000, 150,000 155,000, 165,000	4.14-5.06
200,000	3.96-4.84

Note: In some cases it is possible for the resistance to read correctly without power applied and the motor still not work with power applied. If the ignition control assembly is tested and found to be good, then the motor is defective and should be replaced.

Note: Motor may vary according to model

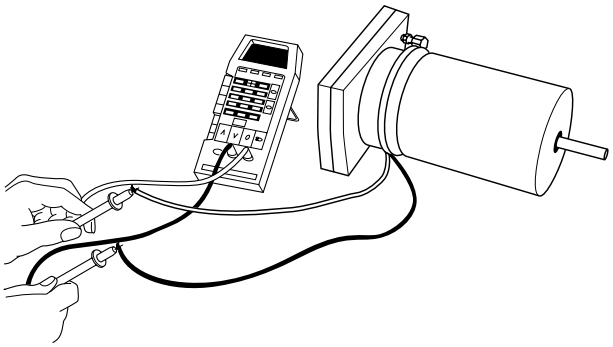

6 Defective Ignition Control Assembly

Disconnect motor wires from control. Attach voltmeter leads to motor terminals on control. Use 0 to 200 V.A.C. scale on meter. Plug power cord into a 120V/60 Hz grounded outlet. Meter should read 0 volts for five seconds, 120 volts for 3 to 4 seconds, then drop to 0 volts. If the meter remains at 0 volts, the control is defective and should be replaced.

7 Defective Start/Run Capacitors

Motors used in 70,000 to 200,000 Btu model heaters are the Permanent Start Capacitor (PSC) type and are equipped with an integral start/run capacitor. If the resistance of the motor windings read correctly and the ignition control assembly is found to be working properly, the capacitor may be "open" circuit. The capacitor is wired internally and cannot be replaced. No service parts are available and entire motor assembly should be replaced.

8 Improper Voltage Input to Heater

The specified voltage operating range for this product is 108 to 132 volts (rms) 60 hertz. Verify that the voltage applied to the heater while the motor is running is at least 108 volts and does not exceed 132 volts. Refer to the *Electrical* section of this manual (page 5) for proper extension cord sizing.

OBSERVED FAULT

Ignitor Does Not Heat Up and Motor Does Not Start Within 5 Seconds

Possible Causes External to Heater

- Circuit Breaker is Tripped
- Check for Broken or Frayed Wires on Power Cord or Extension Cord
- If External Thermostat is Used, Plug Heater Directly Into AC Source to Isolate Source of Problem

Possible Causes Internal to Heater

1. Bad Electrical Connection(s) or Wired Incorrectly
2. Blown Fuse on Ignition Control Assembly
3. Defective Ignition Control Assembly

TEST PROCEDURE

1 Bad Electrical Connection(s) or Wired Incorrectly

Verify that all connections to the ignition control assembly are secure and wired according to the wiring diagram on page 23.

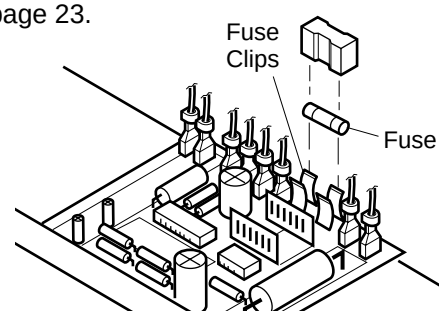

Checking Fuse

2 Blown Fuse on Ignition Control Assembly

Remove fuse cover and inspect fuse. Check for continuity with an ohmmeter. If fuse is open, replace with a fuse of the same type and rating (GMA-10).

3 Defective Ignition Control Assembly

With motor and ignitor wires disconnected, connect voltmeter leads to the ignitor terminals. Use the 0 to 200 V.A.C. scale on the voltmeter. Apply power (120V/60Hz) to the control. The meter should read 120 volts for ten seconds and then drop to 0 volts. Remove power to control. Connect meter leads to the motor terminals. Apply power to control. Meter should read 0 volts for five seconds, 120 volts for 3 to 4 seconds, then drop to 0 volts. If measurements differ from those described, control is defective and should be replaced.

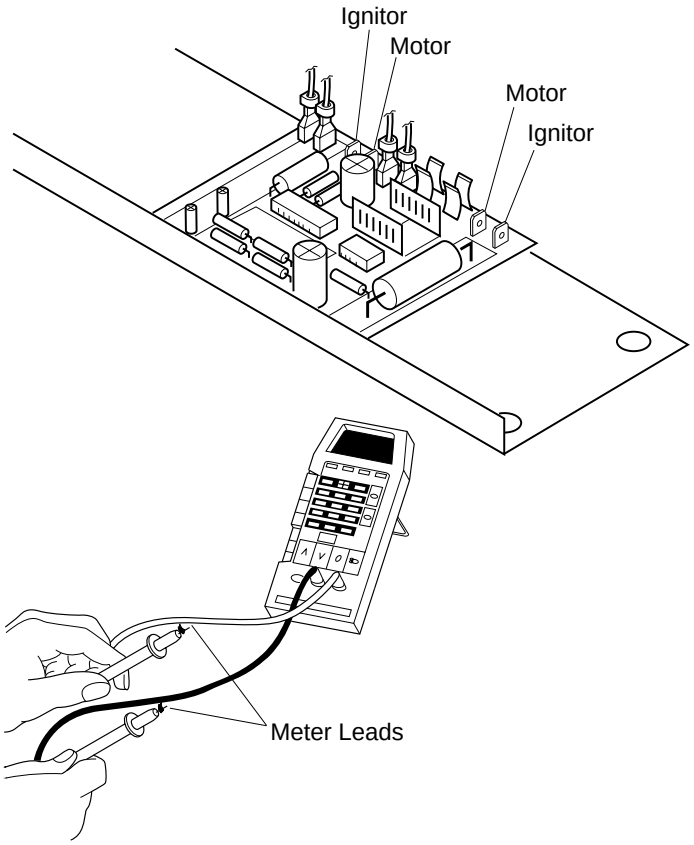

OBSERVED FAULT

Ignitor Heats Up, Motor Starts and Runs, and Fuel Ignites, But Heater Shuts Off After a Short Period of Time

Ignition Control Trips out Within the First Ten Seconds of Operation

1. Defective Ignition Control
2. Defective or Dirty Photocell
3. Bad Electrical Connection(s) or Wired Incorrectly

Safety Control Trips out After Ten Seconds of Operation

4. Photocell Boot Not Properly Seated in Bracket
5. Check for proper Pump Pressure
6. Dirty/Clogged Filters in Compressor
7. Check for Restricted Fuel Flow Due to:
   A. Seal Leak
   B. Filter Blocked
   C. Restriction in Nozzle or Nozzle Adapter
8. Fuel Cap and Gasket Not Vented

TEST PROCEDURE

1 Defective Ignition control

Remove pressure gauge plug from filter end cover. Remove 4 side cover screws that attach the side cover to the heater. Allow side cover (with ignition control attached) to rest on fuel tank flange. Disconnect only the photocell wires from ignition control. Attach the HA1170 leads to the photocell terminals on the ignition control. Plug the power cord into a grounded 120V/60 Hz outlet. When the motor starts turn the HA1170 toggle switch to the "flashing" red LED position (see page 10 for HA1170 calibration procedures). If the motor shuts off after 3 or 4 seconds, the control is defective and should be replaced.

If the motor continues to run in step 1, the photocell may be dirty or defective.

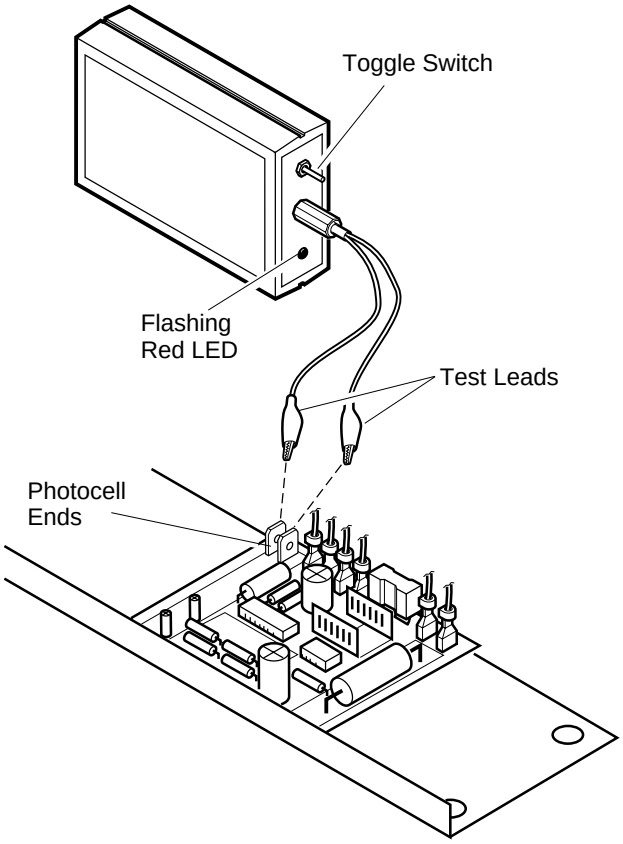

② Defective or Dirty Photocell Assembly

Inspect the lens of the photocell for soot/dirt, etc... If dirty, wipe off with a clean, damp cloth.

Remove photocell assembly from heater. Turn the toggle switch on the HA1170 tester to the "solid" red LED position. Place the photocell boot over the red LED on the tester. Connect the leads of an ohmmeter to the terminals on the photocell assembly. Use the 0 to 20,000 OHM scale on the meter. The resistance should measure 11,000 OHMS or less. If not the photocell is defective and should be replaced.

Block off the light source by putting thumb over opening of photocell. Replace the photocell if a change in resistance is not observed.

The resistance should measure greater than 50,000 OHMS (use the 1 megohm scale on the meter).

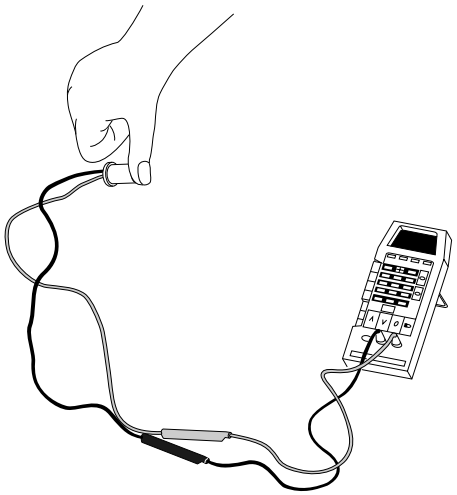

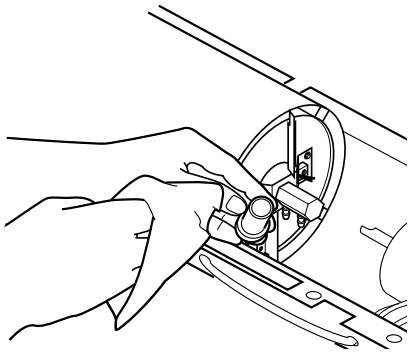

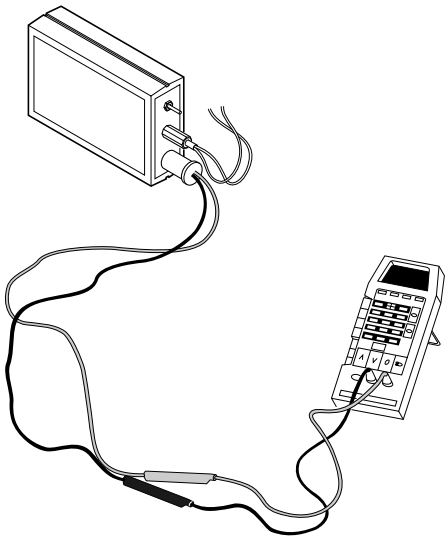

③ Bad Electrical Connection(s) or Wired Incorrectly

Verify that all electrical connections are secure and making electrical contact. Verify that wiring is per the wiring diagram (see diagram, page 23).

④ Photocell Boot Not Properly Seated in Bracket

Make sure photocell boot is seated in bracket securely. See illustration that follows.

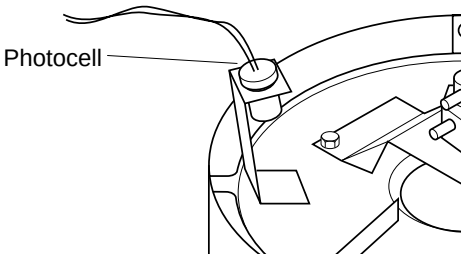

Correct Photocell Placement

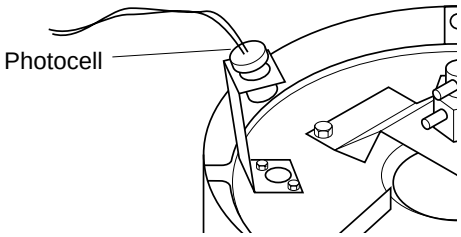

Incorrect Photocell Placement

5 Check for Proper Pump Pressure

Install HA1180 Pressure Gauge or equivalent to rear of air filter housing. Start heater and adjust air pressure to specified pressure. Turning adjustment screw clockwise increases pressure, counterclockwise decreases pressure. The screwdriver must be removed from the slot after any adjustment before taking a reading on the gauge. (See *Heater Performance Specification,* on page 6 for specified pressures). It may be necessary to connect the HA1170 tester in place of the photocell while adjusting the pressure due to the fast shutdown response of the control.

Note: Pressure gauge must be scaled in 1/4 pound increments for accurate measurement.

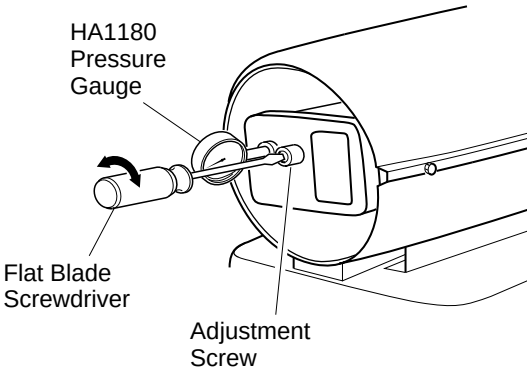

6 Dirty/Clogged Air Filters in Compressor

Inspect and replace air intake, air output, and lint filter if necessary. Filters should be replaced after 500 hours of operation.

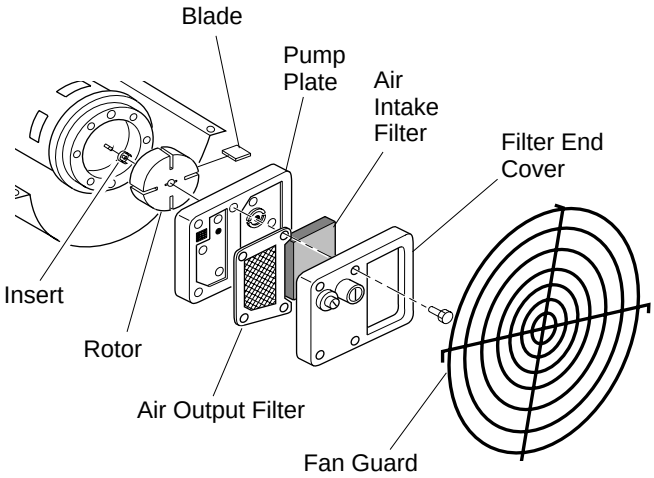

7 Check for Restricted Fuel Flow

35,000 to 165,000 Btu Models Remove air and fuel lines from nozzle adapter. Remove nozzle adapter/nozzle from bracket.

200,000 Btu Model Remove ignitor (do not strike or bend element) from bracket. Place in a safe location. Remove air and fuel lines from nozzle adapter. Remove two bracket screws and remove bracket, nozzle adapter and nozzle assembly from combustion chamber.

Using a 5/8" socket wrench, carefully remove the nozzle from nozzle adapter. (Be extremely careful not to scratch or score the face of the nozzle).

A. Seal Leak

Inspect nozzle seal or o-ring for damage. Replace if necessary.

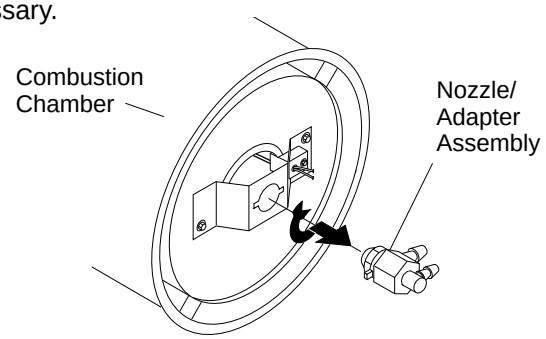

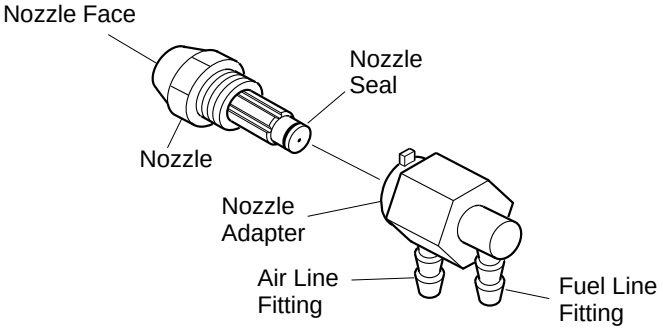

35,000 - 165,000 Btu Models

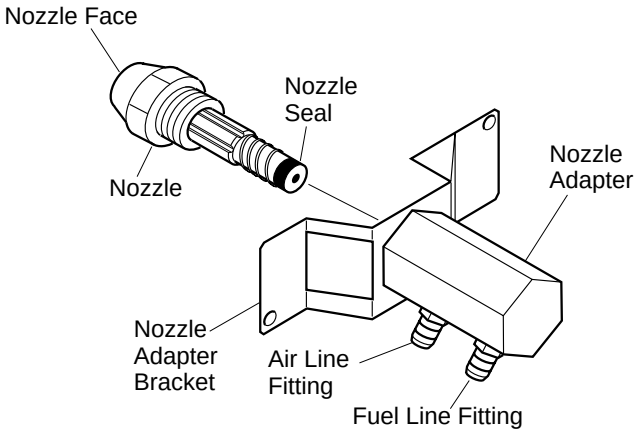

200,000 Btu Models

8 Fuel Cap and Gasket Not Vented

Remove fuel cap and inspect the vent hole and gasket to make sure the passage is open. Verify that only one gasket has been installed. The fuel tank must be vented properly for the fuel delivery system to operate correctly.

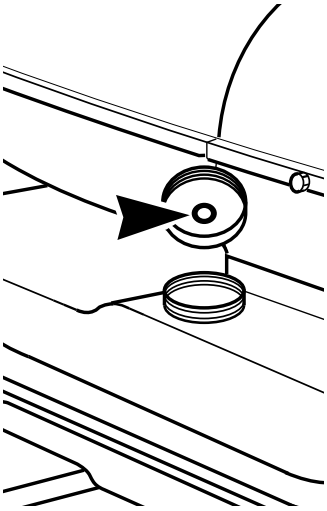

OBSERVED FAULT

Delayed Igniton

1. Wrong Fuel
2. Contaminated or Old Fuel

TEST PROCEDURE

1 Wrong Fuel

Refer to *Fuel Selection* on page 5 of this manual.

2 Contaminated or Old Fuel

Fuel may not be fresh or may be contaminated with water or other foreign liquids. Drain fuel tank and rinse with clean, fresh kerosene or No. 1 fuel oil. Refer to local city or county ordinances for proper disposal of fuel oil.

WIRING DIAGRAMS

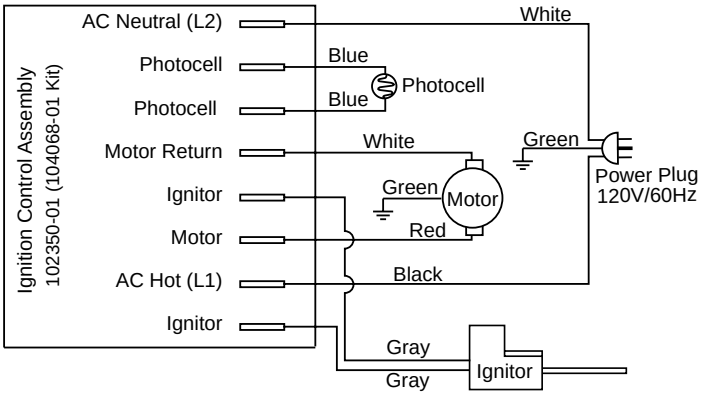

ATTENTION: Earth ground must be connected to ensure operator safety!

55,000 BTU Model (R55A Model Only)

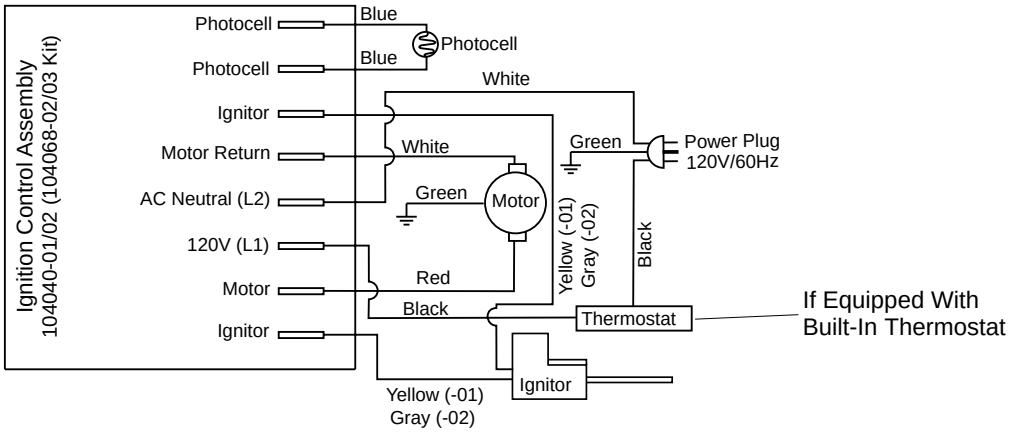

35,000, 40,000, 50,000, 55,000, 60,000, 70,000, 110,000, 115,000, 150,000, 155,000, 165,000 BTU Models

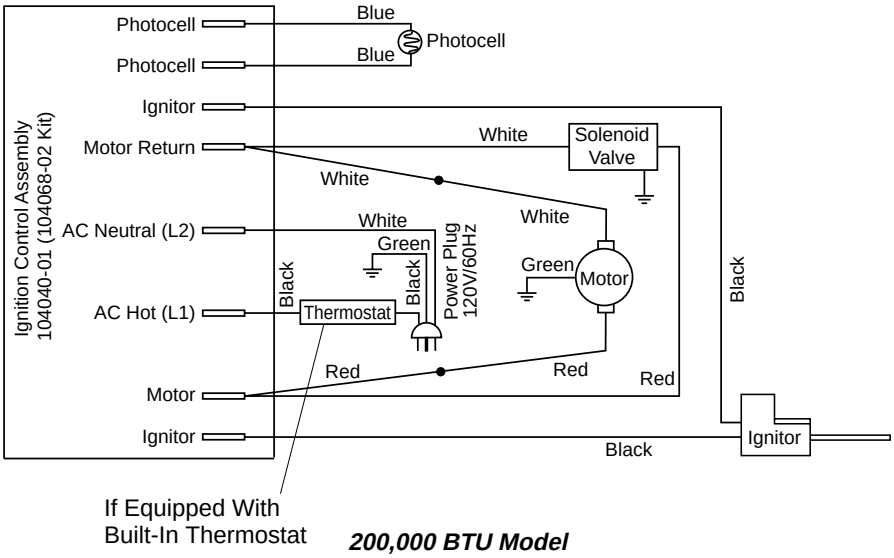

200,000 BTU Model

DESA
INTERNATIONAL
Technical Service Department
P.O. Box 90004
2701 Industrial Drive
Bowling Green, Kentucky 42102
www.desatech.com

SECTION B

SERVICE MANUAL

LOW PRESSURE
PORTABLE FORCED AIR HEATER

SPARK PLUG IGNITION MODELS

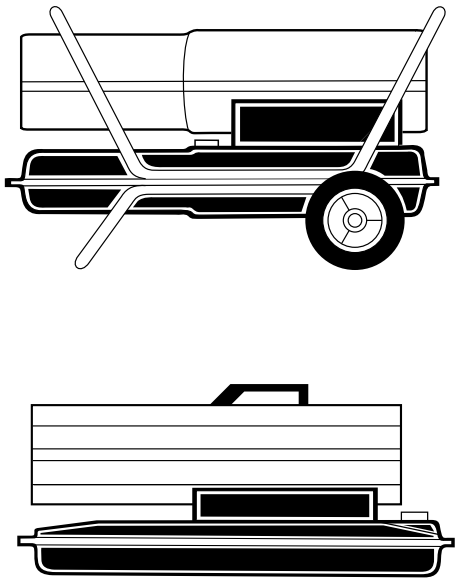

SAFETY INFORMATION

⚠ WARNINGS

IMPORTANT: Read this owner's manual carefully and completely before trying to assemble, operate, or service this heater. Improper use of this heater can cause serious injury or death from burns, fire, explosion, electrical shock, and carbon monoxide poisoning.

⚠ DANGER: Carbon monoxide poisoning may lead to death!

Carbon Monoxide Poisoning: Early signs of carbon monoxide poisoning resemble the flu, with headaches, dizziness, and/or nausea. If you have these signs, the heater may not be working properly. **Get fresh air at once!** Have heater serviced. Some people are more affected by carbon monoxide than others. These include pregnant women, persons with heart or lung disease or anemia, those under the influence of alcohol, and those at high altitudes.

Make certain you read and understand all warnings. Keep this manual for reference. It is your guide to safe and proper operation of this heater.

- Use only kerosene or No. 1 fuel oil to avoid risk of fire or explosion. Never use gasoline, naphtha, paint thinners, alcohol, or other highly flammable fuels.
- Fueling
  a) Personnel involved with fueling shall be qualified and thoroughly familiar with the manufacturer's instructions and applicable federal, state, and local regulations regarding the safe fueling of heating units.
  b) Only the type of fuel specified on the heater's data plate shall be used.
  c) All flame, including the pilot light, if any, shall be extinguished and the heater allowed to cool, prior to fueling.
  d) During fueling, all fuel lines and fuel-line connections shall be inspected for leaks. Any leaks shall be repaired prior to returning the heater to service.
  e) At no time shall more than one day's supply of heater fuel be stored inside a building in the vicinity of the heater. Bulk fuel storage shall be outside the structure.
  f) All fuel storage shall be located a minimum of 25 feet from heaters, torches, welding equipment, and similar sources of ignition (exception: the fuel reservoir integral with the heater unit).
  g) Whenever possible, fuel storage shall be confined to areas where floor penetrations do not permit fuel to drip onto or be ignited by a fire at lower elevation.
  h) Fuel storage shall be in accordance with the federal, state, or local authority having jurisdiction.
- Never use heater where gasoline, paint thinner, or other highly flammable vapors are present.
- Follow all local ordinances and codes when using heater.
- Heaters used in the vicinity of tarpaulins, canvas, or similar enclosure materials shall be located a safe distance from such materials. The recommended minimum safe distance is 10 feet. It is further recommended that these enclosure materials be of a fire retardant nature. These enclosure materials shall be securely fastened to prevent them from igniting or from upsetting the heater due to wind action.
- Use only in well-vented areas. Before using heater, provide at least a three-square-foot opening of fresh, outside air for each 100,000 Btu/Hr of rating. This heater produces carbon monoxide, which is listed by the State of California as a reproductive toxin under Proposition 65.
- Use only in places free of flammable vapors or high dust content.
- Use only the electrical voltage and frequency specified on model plate.
- Use only a three-prong, grounded extension cord.
- Minimum heater clearances from combustibles:

  Outlet: 8 Ft. Sides: 4 Ft. Top: 4 Ft. Rear: 4 Ft.
- Locate heater on a stable and level surface if heater is hot or running or a fire may occur.
- When moving or storing heater, keep heater in a level position or fuel spillage may occur.
- Keep children and animals away from heater.
- Unplug heater when not in use.
- When used with thermostat, heater may start anytime.
- Never use heater in living or sleeping areas.
- Never block air inlet (rear) or air outlet (front) of heater.
- Never move, handle, refuel, or service a hot, operating, or plugged-in heater.
- Never attach duct work to front or rear of heater.
- Approved by the New York City Fire Department under certificate of approval #4803, #4860, #4908, or #4909. To be used only at construction sites in accordance with applicable New York City Codes, Regulations, Rules, Directives, Permits, etc.
- **Warning to New York City Residents** For Use Only At Construction Sites in accordance with applicable NYC codes under NYCFD certificate of approval #4803, #4899, #4908, #4909, or #4934.

TABLE OF CONTENTS

General Information

I. Arrangement of Manual 3
II. Technical Service Department 3
III. Service Preparation 3
IV. Tools Required 4
V. Parts 4

Specifications

I. General Specifications
1. Fuel Selection 5
2. Electrical 5
3. Ventilation 5
4. Heater Sizing 6
Heater Performance Specifications 6

Component Operation

I. Air System
1. Air Pump 7
2. Air Filters 7
3. Nozzle 7
II. Electrical System
1. Motors 7
2. Solid State Relay 8
3. Safety Control/Photocell 8
4. Electronic Ignitor 9
III. Fuel System 9
IV. Combustion System 9
V. All Systems Working Together 9

Troubleshooting

I. Safety Requirements 10
II. Cautions 10
III. Using the Ohmmeter
1. Setting Up the Ohmmeter 10
2. Calibration 10
IV. Diagnostic Charts 10

Diagrams and Charts

I. Wiring Diagrams 23
II. Motor Resistance Chart 23

GENERAL INFORMATION

I. ARRANGEMENT OF MANUAL

This manual contains information and service procedures to assist the service technician in understanding and correcting problems on DESA International oil-fired portable forced air heaters. The first section of the manual contains basic information concerning the operation of the different components in the heater. This information should be reviewed by service personnel to provide a basic understanding of how the components function in the working system. Section four of this manual is intended to provide a quick reference concerning conditions which result in customer complaints. These procedures will help the service technician quickly diagnose a malfunctioning heater. The illustrations in this manual may not necessarily depict the actual heater model, and are intended for reference ONLY.

II. TECHNICAL SERVICE DEPARTMENT

The Technical Service Department, located in Bowling Green, Kentucky, is committed to assisting our Authorized Service Centers to increase their service knowledge, so that they can provide prompt, efficient service. This Service Manual covers the majority of problems that are associated with the heaters. However, as with any product, certain problems can arise which have not been covered. If such problems arise, please call the Technical Service Department's number, 1-800-323-5190, to address these technical problem areas. If you need assistance for ordering parts, billing questions, etc. you should contact 1-800-432-5212.

III. SERVICE PREPARATION

A clean work area at the start of each job is essential for efficient service work. Heaters which are extremely dirty should be cleaned prior to service. Cleaning will occasionally uncover the problem area. Tools needed for the job should be obtained before work is started. Delays resulting from locating tools result in lost time and wages.

Clean fuel should always be used when testing heaters. Many problems are often traced to the use of the wrong type of fuel or dirty fuel.

Use caution and common sense when working on a heater. Always remember that kerosene is flammable, electrical parts can result in the potential shock and the heater parts are hot during operation, which could result in burns if one is not careful.

IV. TOOLS REQUIRED

In addition to common hand tools, the service shop should have the following tools and instruments for proper repairing of the heaters. These instruments will be referred to throughout this manual.

INSTRUMENT	RANGE	PART NUMBER
Pressure Gauge	0-15 PSI	HA1180
Feeler Gauge	.001 to .1 inch	None*
Volt Ohmmeter	RX1/AC 250V	None**

*Available at any auto parts store.
**Available at most electronic stores.

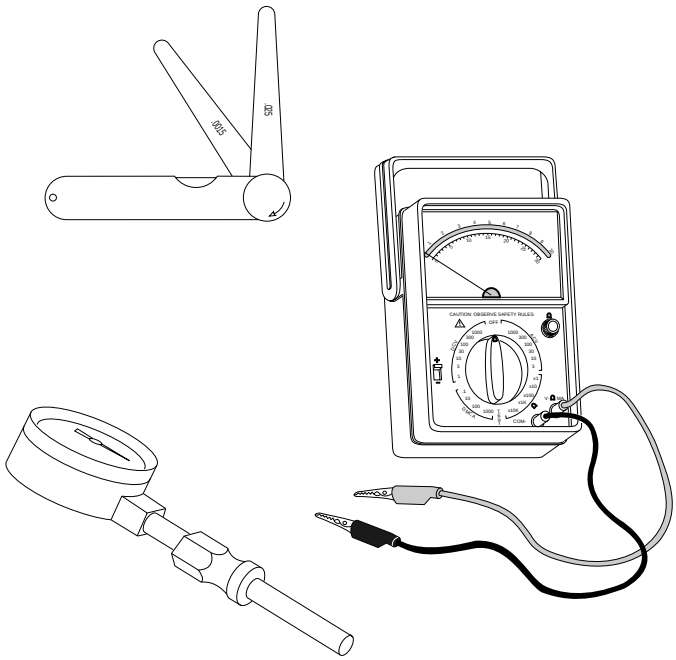

V. PARTS

Accessories

In addition to the standard parts we now offer parts kits. Listed below are the item numbers and the accessory description

ITEM NUMBER	ACCESSORY
HA1176A	Parts Kit/All Models
HA1180	Air Gauge/All Models
HA1210	Thermostat/Forced Air & LP Forced Air
HA1202	Heavy Duty Wheel Kit Fits: 30, 35, 40, 50, 55, 70 Models
HA1206	Wheel Kit Fits: 30, 35, 40, 50, 55, 70 Models
HA2203	Rear Handle Fits: 100, 110 Models
HA2204	Rear Handle Fits: 150, 155, 165, 200 Models
HA2210	Filler Neck Screen
HA3003	Flame Out Safety Control
HA3004	Rotor Kit 1/2"
HA3006	Nozzle (35, 40 Models)
HA3007	Nozzle (50 Models)
HA3008	Nozzle (70 Models)
HA3009	Nozzle (100, 110 Models)
HA3011	Nozzle (150, 155 Models)
HA3012	Spark Plug (70, 100, 150, 155, 165, 200 Models)
HA3013	Spark Plug (35, 50 Models)
HA3014	Air Filter Kit (30, 50, 70 Models)
HA3017	Filter Kit (100, 110, 150, 155, 165, 200 Models)
HA3025	Tune Up Center Display
HA3005	Rotor Kit 5/8"
HA3021	Nozzle (55 Models)
HA3023	Nozzle (165 Models)
HA3019	Photocell
HA3020	Pump Adjustment Kit

Tune Up Center

The Tune Up Center (HA3025) shown below includes the parts listed.

Part No. Includes	Qty.	Description
HA1210	2	Thermostat
HA3003 (098205-04)	3	Flame Out Safety Control
HA3004 (M22456-1, M22009, M8643)	3	Rotor Kit
HA3005 (M22456-2, M22009, M8643-2)		Rotor Kit 5/8"
HA3006 (100735-02) HA3007 (100735-03)	2 2	Nozzle Nozzle
HA3008 (100735-04, M8882) HA3009 (100735-06, M8882) HA3011 (100735-07, M8882)	2 2 2	Nozzle Kit Nozzle Kit Nozzle Kit
HA3012 (M10962-2) HA3013 (M29835)	4 3	Spark Plug Spark Plug
HA3014 (M29632, M29612-01, M29633)	3	Air Filter Kit
HA3017 (M12179, M11637, M12244-1, M51150-01	3	Filter Kit
HA3019 (M16656-16)		Photo Cell
HA3020 (M10993-1, M22997, M27694, M8940)		Pump Adjustment Kit

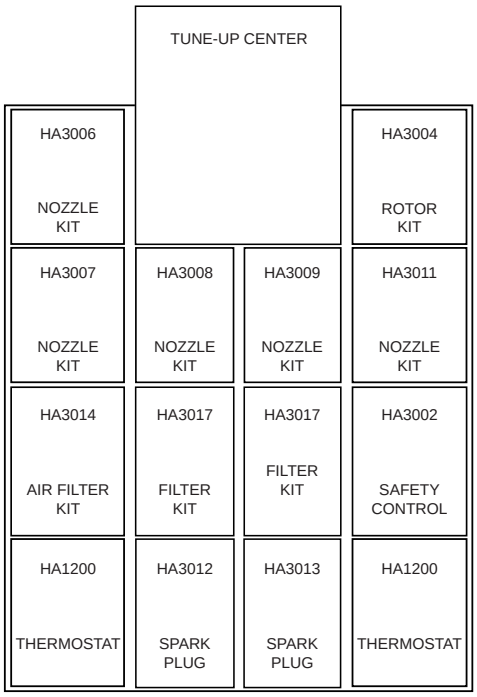

SPECIFICATIONS

I. GENERAL SPECIFICATIONS

1. Fuel Selection

One of the most critical specifications for trouble-free operation is the use of a clean, acceptable fuel. Listed below are guidelines and comments concerning operation of heaters with different fuels.

RECOMMENDED FUELS	COMMENTS
Kerosene Fuel Oil No.1 Jet "A"	Best overall results. Minimum odor and minimum maintenance. No additives necessary for cold weather operation.

ALTERNATE FUELS	COMMENTS
Fuel Oil No. 2 Diesel No. 1 Diesel No. 2	Noticeable increase in odor. Requires frequent maintenance of fuel filter, nozzle and spark plug. Requires a winterizing additive at temperatures below 20°F

2. Electrical

The heater must be connected to a standard electrical outlet (120V/60HZ). For safety, all heaters are equipped with a three prong power cord, which must be grounded. When selecting an extension cord for heater usage, the following chart should be used in determining wire size.

LENGTH OF CORD	WIRE SIZE (AWG)
100 Ft.	No. 14
200 Ft.	No. 12
300 Ft.	No. 10
400 Ft.	No. 8
	No. 6

3. Ventilation

The heater should be used only in well-ventilated areas. As a rule, the following minimum requirements should be followed.

HEATER SIZE (BTU)	SQUARE FOOT OPENING
30,000/35,000	1.0 Sq. Ft.
50,000/55,000	1.6 Sq. Ft.
70,000	2.1 Sq. Ft.
100,000/110,000	3.2 Sq. Ft.
150,000/155,000	4.5 Sq. Ft.
165,000	5.0 Sq. Ft.
200,000	6.0 Sq. Ft.

The above is based on ventilation requirements of at least a 3 sq. ft. opening per 100,000 BTU. If possible, it is better to provide cross-ventilation to achieve better air movement.

4. Heater Sizing

The user should be aware of the proper size heater needed for a particular application. It is easy to see that a 30,000 BTU heater would not heat a large warehouse, but the question is sometimes asked "What size heater should I use?" A simple formula that can be used to determine heater BTU requirements follows:

Cu. Ft. of Area X .133 X Desired Temp. Rise °F = BTU Size Needed.

Example:
Area: 50' X 25' X 10' = 12,500 Cu. Ft.
Desired Temp. Rise: 30°F

12,500 (Cu. Ft.)
X .133 (Factor)
1662.5
X 30 (Temp. Rise)
49,875 (Proper Heater Size)

ANSWER: A 50,000 BTU heater should be selected for this application.

II. HEATER PERFORMANCE SPECIFICATIONS (SPARK PLUG MODELS)

Reddy Heater Brand Technical Service Heater Performance Data

Heater Model	BTU Rating	Pump P.S.I. ± 1	Nozzle Part No.	Nozzle Flow GPH ±5%	Motor Part No.	Motor R.P.M.	Motor Horsepower	Motor Start Relay or Solid State Relay	Fuel Tank Capacity (Gal)	Hot Air Output (C.F.M.)	AMPS (Running)	Spark Plug Gap (inches)
R30	30,000	3.0	M29681	0.23	102001-01	1725	1/15	Not Used	3.0	165	2.8	.050/.060
R35,R35A, R35B	35,000	3.0	100735-02	0.27	102001-01	1725	1/15	Not Used	3.0	165	2.8	.050/.060
R50, R50A R50B	50,000	3.6	M50597	0.37	102001-01	1725	1/15	Not Used	4.0	165	2.9	.050/.060
R55	55,000	3.4	100735-17	0.40	102001-01	3450	1/15	Not Used	5.0	175	2.9	.050/.060
R70, R70A R70B, R70BT	70,000	4.0	100235-04	0.52	097308-02	3415	1/8	M25061-1	5.0	250	3.0	.050/.060
R100, R100A	100,000	4.0	100735-06	0.74	097300-02	3450	1/5	097061-01	9.0	480	5.5	.070/.080
R110	110,000	4.0	100735-06	0.80	097300-02	3450	1/5	097061-01	9.0	490	5.5	.070/.080
R150B, R150D	150,000	3.4	100735-07	1.10	097300-02	3450	1/5	099061-01	13.5	550	5.0	.070/.080
R165	165,000	5.4	100735-10	1.10	102001-07	3450	1/4	097061-01	13.5	575	5.0	.070/.080
R200	200,000	6.0	100735-13	1.4	102001-07	3450	1/4	097061-01	13.5	600	4.5	.105/.115

102482-01 Transformer or Electronic Ignitor will apply to all models for service.

COMPONENT OPERATION

I. AIR SYSTEM

1. Air Pump

The heater's air pump consists of a rotor with four carbon blades rotating inside a pump body. The rotor is driven directly by the motor and is attached to the motor shaft by means of a plastic insert. As the motor rotates, the carbon blades travel outward rubbing against the inside surface of the steel pump body. The rotor's position inside the pump body is such that it is not concentric with the pump body and a .003/.004 of an inch gap is set at the uppermost quadrant. As the motor rotates, the air between the blades is compressed and routed to the nozzle through the air line.

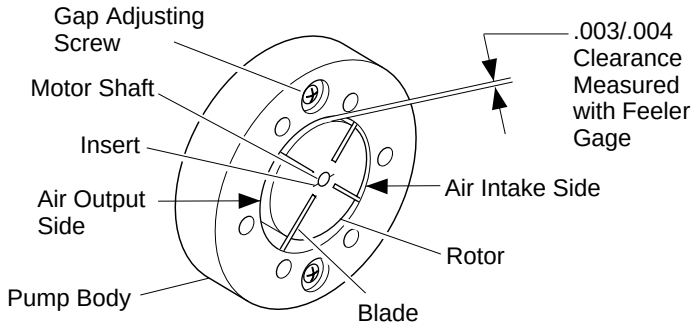

Direction of Rotation-Clockwise

2. Air Filters

The air filtering system consists of an air input filter and an air output filter. The air input filter is located at the right rear of the motor and its purpose is to filter all incoming air prior to entering the air pump. The filter design is such that it can be cleaned in a mild, soapy solution, thoroughly dried and used over again. The air output filter is located under the plastic end cover. This filter's purpose is to prevent any carbon dust (from rotor or blade wear) from entering the air passages in the nozzle. This filter is non-cleanable and should be replaced when considerable buildup of carbon dust is observed. (See drawings below).

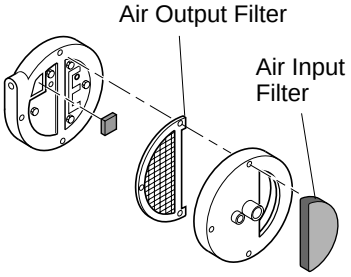

30,000, 35,000, 50,000, 55,000, and 70,000 BTU Filter System

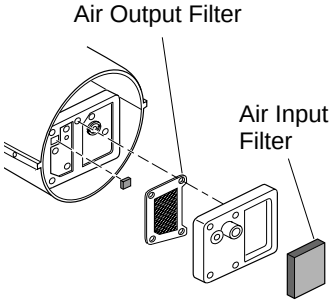

100,000, 110,000, 150,000, 155,000, 165,000, and 200,000 BTU Filter System

3. Nozzle

As mentioned previously, the purpose of the air pump is to compress air and deliver it to the nozzle. The compressed air, as it travels through the nozzle, creates a negative pressure that extends back through the center of the nozzle. This negative pressure lifts the fuel from the fuel tank. The fuel from the fuel tank and the compressed air are mixed at the nozzle which results in a very fine mist of fuel being sprayed into the combustion chamber. The air pump/nozzle combination eliminates the need for a conventional type fuel pump. It is important for the service technician to understand the nozzle operation. In many cases concerning improper operation of a heater, the problem is the result of a seal leak or a restriction (dust/dirt) being present within the nozzle. It should also be pointed out that each model heater requires different nozzles due to different fuel flow rates.

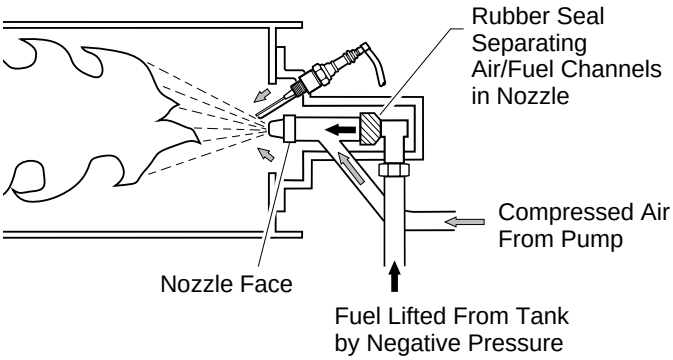

I. ELECTRICAL SYSTEM

1. Motors

The motors used on the low pressure heaters are fractional horsepower motors ranging from 1/15 HP on the smallest heater to 1/4 HP on the largest heaters. The motors used can be grouped into two categories. The first category is the shaded pole motor. The shaded pole motor contains a single winding and does not require an external start relay for operation.

These motors are easily identified by observing that only two wires (usually red and white) are necessary for operation.

The second category is the split-phase motor. This motor contains two separate windings. The first winding being the auxiliary or start winding and the second being the main or run winding. This motor requires and external means of switching the power off to the auxiliary winding after the motor reaches a predetermined speed. This power off switching is accomplished by a motor start relay or solid state relay. These motors are identified by observing that three wires (black, red and white) are routed from the motor.

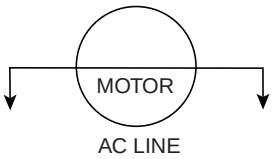

Shaded Pole Motor

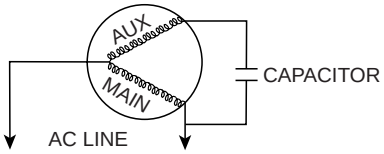

Split-Phase Motor

2. Solid State Relay

Applicable models use 097061-01 Solid State Relay.

The solid state relay is used to de-energize the start winding on split-phase motors. As mentioned in the Motor Section, remember that split-phase motors have both an auxiliary (start) and a main (run) winding. For proper motor operation, both the auxiliary and main winding are energized during start up. After the motor starts and reaches approximately 80% of rated speed, the auxiliary winding must be de-energized to prevent overheating. This is accomplished by the use of a solid state relay. The operation of the relay functions as a positive temperature coefficient resistor. When voltage is applied to the motor, the main and auxiliary windings are energized as current flows through the solid state relay which is connected in series with the auxiliary winding only. The resistance is increased over time in the solid state relay where it eventually rises to the point that theoretically no current flows, de-energizing the auxiliary winding.

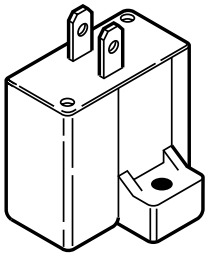

Solid State Relay

3. Safety Control/Photocell

The safety control circuit consists of a photocell (light sensitive cell) and a safety control. The photocell is used to sense the presence of light inside the combustion chamber. The photocell varies its electrical resistance in relation to the light rays which contact its surface. When the heater is operating properly, the photocell sees sufficient and proper color light, which keeps its resistance low. When the photocell does not sense the proper color or amount of light, the resistance of the photocell increases and forces an electrical current to flow through the solid state trigger circuit. The current flows into the circuit breaker and heats a metal bar causing the bar to warp (bimetal). The warpage releases the spring loaded reset button, which breaks all power to the heater. As a service technician, it is important to understand the operation of the safety control. In the past, it has been the single most misdiagnosed part of the heater. It is suggested that all controls be checked per instructions listed in the Troubleshooting Section, prior to replacement.

Flameout Safety Controls

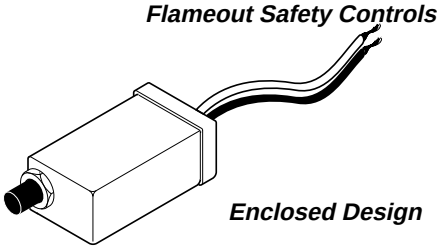

Enclosed Design

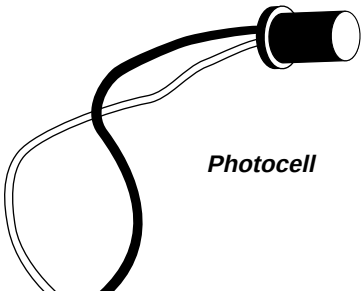

Photocell

4. Electronic Ignitor

All models use 102482-01 Electronic Ignitor Kit.

The electronic ignitor operates on 120V/60Hz. It delivers approximately 6,000 volts average to the spark plug causing the kerosene sprayed from the nozzle assembly to ignite. The ignitor operates on a pulse basis. The ignitor has no internal service parts and must be replaced when found defective.

Note: It is important for the service technician to be cautious when working with the electronic ignitor due to its high voltage output.

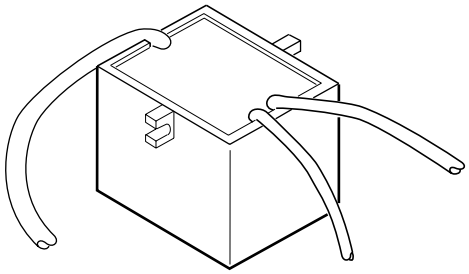

III. FUEL SYSTEM (Fuel filters)

There are several types of fuel filters used on different model heaters. The filters are always located in line with the fuel pickup tube. The purpose of the filter is to eliminate the possibility of dirt, dust, etc. from entering the nozzle and restricting the flow. The filters should be inspected and cleaned whenever a heater is brought in for service. It is also important that the bottom of the tank be inspected for sedimentation or dirt buildup. The filter's design is such that a possible restriction in the filter screen can be present during operation and be dislodged back into the tank when the heater is shut off.

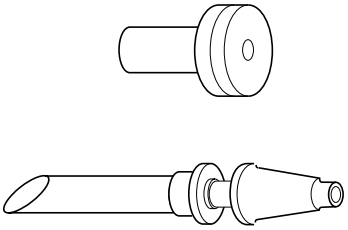

IV. COMBUSTION SYSTEM (Burner Head)

The burner head is mounted to the rear of the combustion chamber. The purpose of the burner head is to meter and mix the amount of air entering the chamber to obtain proper combustion characteristics. The nozzle is mounted in the center of the burner head and is surrounded by fins, so that the amount of air entering the chamber from the burner head is equal and balanced. The size of the slots in the burner head differ between models.

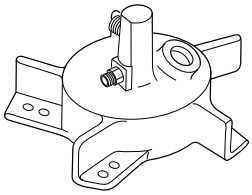

V. ALL SYSTEMS WORKING TOGETHER

There are four basic systems within the heater: the fuel system, the air system, the electrical system and the combustion system.

An air pump (A) on one end of the motor shaft forces air through the air line (G) and out the burner nozzle (I). The moving air creates a pressure differential in the burner head (N) causing fuel to be drawn from the tank (J). The fuel-air mixture is sprayed into the combustion chamber (L) in a fine mist.

Addition air is supplied to the combustion chamber by a fan (O) to enter the combustion chamber where it mixes with the air and fuel from the nozzle. The remaining air is directed around and over the combustion chamber. This air mixes with the heated air from the combustion chamber and is ejected as a jet of clean, heated air (K).

The ignition system consists of an electronic ignitor (E) and spark plug (M). The electronic ignitor increases the input voltage to a very high potential, which causes and arc to jump between the electrodes of the spark plug. The arc is used to ignite the fuel and air mixture within the combustion chamber. The arc fires constantly during operation.

In the safety circuit, the flame sensor detects the presence of light from the flame inside the combustion chamber.

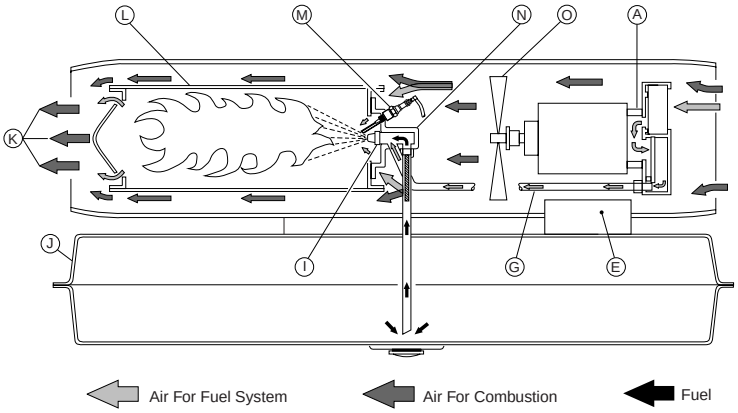

TROUBLESHOOTING

I. SAFETY REQUIREMENTS

This service manual is intended for use by individuals with an adequate knowledge of electrical and mechanical skills. Attempts to repair this heater by individuals without those skills can result in personal injury, as well as property damage.

II. CAUTIONS

1. Before servicing, disconnect the heater from the electrical power source by removing the electrical plug from the wall receptacle.

   Note: When certain tests require electrical power to be applied, connect electrical power only for the time necessary to complete the test.
2. Do not bypass safety devices.
3. If replacement parts are necessary, do not substitute with non-factory parts (use only factory authorized replacement parts).
4. Make sure all electrical connections are secure and all harness leads are in place prior to connection to electrical power source.

III. USING THE OHMMETER

Continuity Check: Throughout the diagnostic procedures, you will be required to check continuity of the electrical circuits. A brief description of how to set up the ohmmeter for these tests follows.

1. Setting Up the Ohmmeter
   A. use a small screwdriver to adjust the plastic screw on the zero "0" mark to the far left of the scale.
   B. With the battery installed, set the switch to the "RX1" position.
   C. Plug in test wires and use insulated alligator clips.

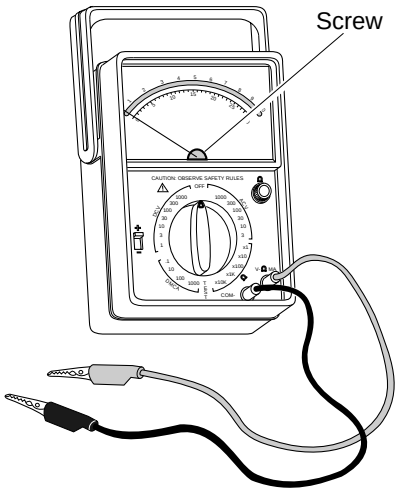

Typical Ohmmeter

2. Calibration
   A. Zero meter - connect the alligator clips to each other. The meter pointer should move to far right of ohms scale (see Figure B).
   B. Use the OHM thumb adjustment knob to set the pointer at the "0" mark on the scale. If pointer will not zero, replace battery.

   Note: If you are using a digital readout ohmmeter, calibrate according to manufacturer's instructions.

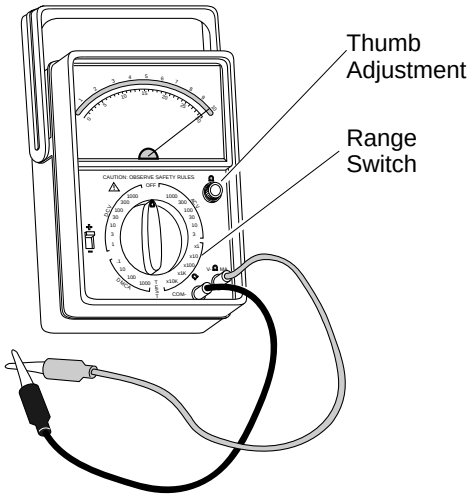

IV. DIAGNOSTIC CHARTS

The following pages contain various diagnostic charts. To use the charts, find the "Observed Fault" that exists and follow test procedure.

Observed Fault Index

Motor starts-Unit does not ignite 11

Motor does not run or runs at slow speeds. Spark is observed at plug 14

Heater does not start/motor and transformer does not operate 17

Heater ignites and burns; However, Safety control trips and heater shuts off..... 19

Frequent plug fouling/delayed ignition 22

OBSERVED FAULT

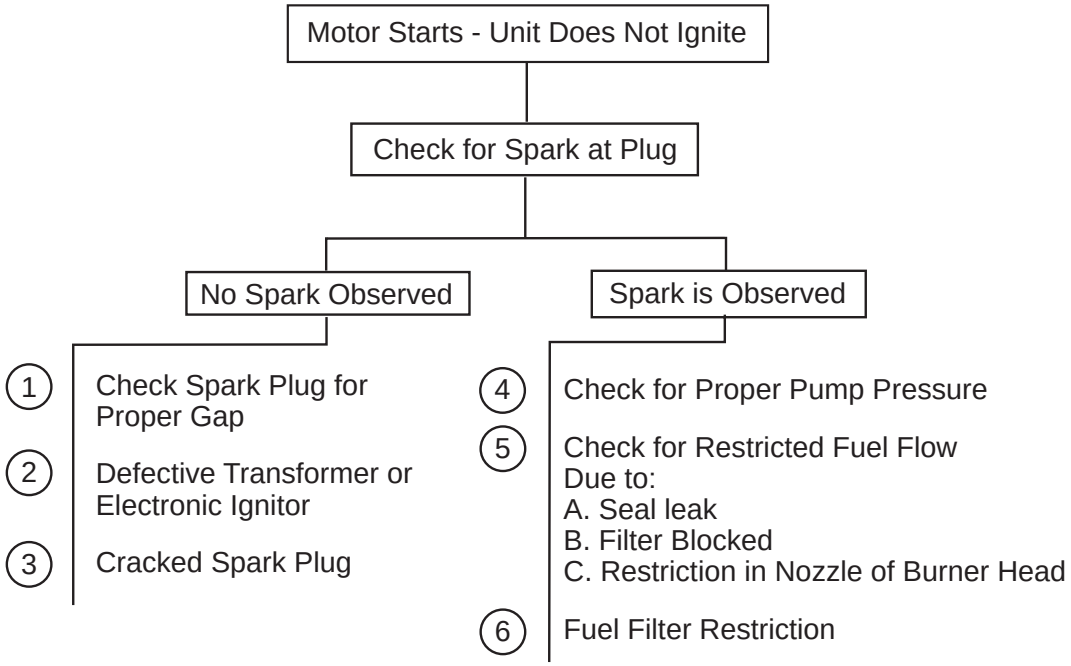

TEST PROCEDURE

1 Check Spark Plug for Proper Gap

See *Heater Performance Specifications "Spark Plug Gap"*, page 6, for proper gap. Reset gap with feeler gauge.

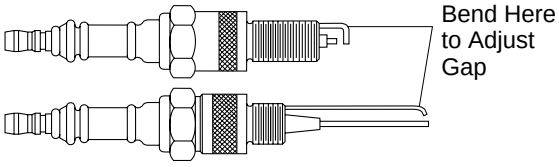

2 Defective Transformer or Electronic Ignitor

Connect the transformer or electronic ignitor to a properly gapped spark plug. Establish a good ground between the spark plug and heater. Plug in the heater cord and observe for spark between electrodes. If the ground is good and a spark does not jump the gap, the transformer or ignitor is defective.

CAUTION: DO NOT LET ANY PORTION OF YOUR BODY TOUCH ELECTRODES OR PLUG, DUE TO HIGH VOLTAGE.

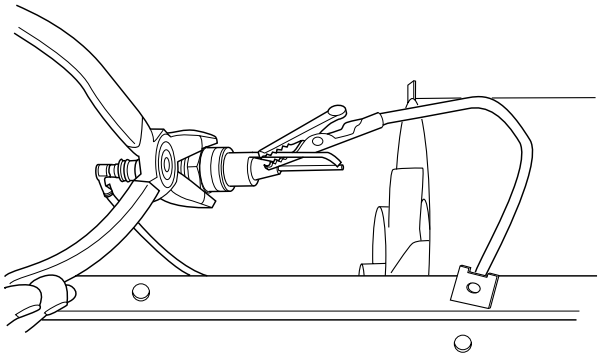

3 Cracked Spark Plug

During the above test, if spark is observed at any portion of the plug, except at the electrodes, the porcelain insulator is cracked and the plug must be replaced.

4 Check for Proper Pump Pressure

Install HA1180 Pressure Gauge or equivalent to rear of air filter housing. Start heater and adjust air pressure to specified pressure. Turning adjustment screw clockwise increases pressure, counterclockwise decreases pressure. The screwdriver must be removed from the slot after any adjustment before taking a reading on the gauge (see *Heater Performance Specifications* on page 6 for specified pressures).

Note: Pressure gauge must be scaled in 1/4 pound increments for accurate measurement.

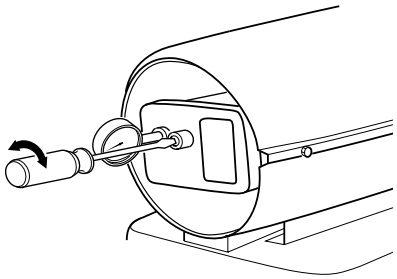

5 Check for Restricted Fuel Flow

Remove the burner head from heater. Using a socket wrench, carefully remove the nozzle from burner head. (Be extremely careful not to scratch or score the face of the nozzle).

A. Seal Leak
   Remove the rubber seal washer from stem of nozzle and discard. (To be safe, always replace nozzle sleeve during servicing of burner head). Even the smallest air leak in this area can reduce flow rates and result in problems.

Note: On smaller heaters (30,000, 35,000, 50,000, and 55,000 BTU), inspect "O" ring, do not remove.

Install a new rubber seal to stem of nozzle. Make sure the seal washer, spring and second seal washer are in place before reinstalling nozzle in the burner head.

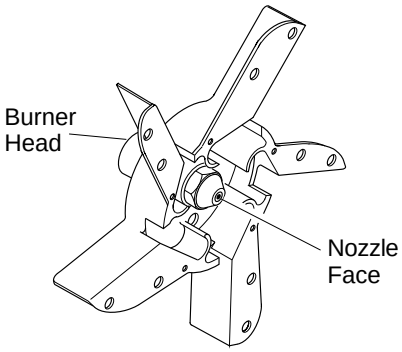

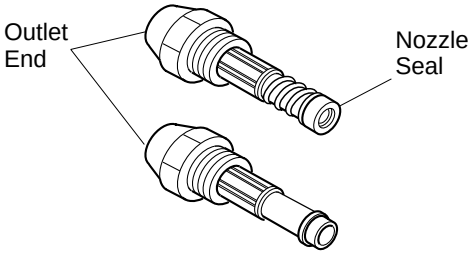

B. Filter Blocked
On certain models, a drop-in fuel filter is located in the copper or aluminum line that attaches to the fuel fitting on the back side of the burner head. Lift the filter out of the copper or aluminum fuel line and clean, if necessary.

C. Restriction in Nozzle or Burner Head
Using a compressed air source, blow the compressed air through the outlet end of nozzle to dislodge any possible restriction.

CAUTION: NEVER DRILL OUT OR TRY TO INCREASE NOZZLE SIZE.

Using compressed air, also blow through passages in burner head. The air should be directed form input fitting at rear of head to the center of burner head. Many times the restriction to the flow is due to metal chips, etc. being present in the burner head assembly.

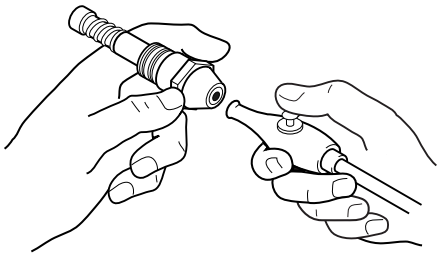

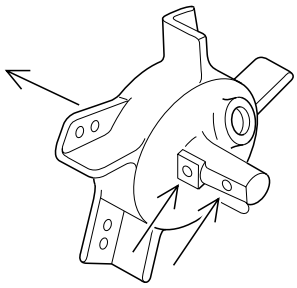

6 Fuel Filter Restriction

The fuel filter should be inspected and cleaned. The filters are located in the fuel line either at tank location, in the copper or aluminum tubing or in line with the fuel line at access cover.

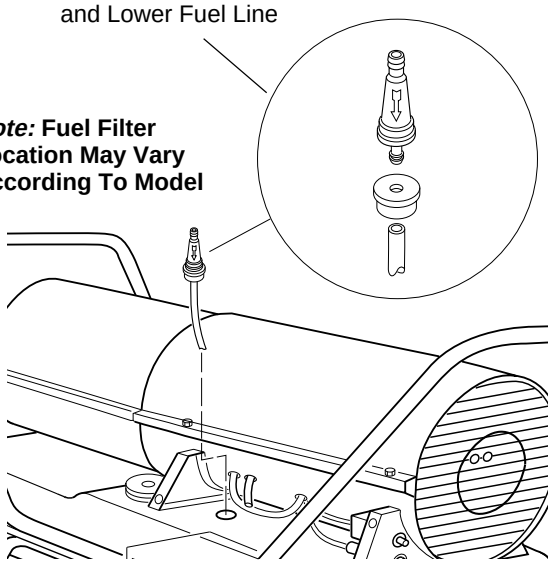

OBSERVED FAULT

Motor Does Not Run or Runs at Slow Speeds. Spark is Observed at Plug

Rotate Fan by Hand to Determine if Fan Rotates Easily

Fan is Difficult to Rotate

1. Broken Rotor or Blades
2. Improper Rotor Clearance
3. Oversized Rotor
4. Dry Motor Bearing

Fan Rotates Easily by Hand

5. Open Motor Winding
6. Defective Solid State Relay
7. Low Voltage to Heater

TEST PROCEDURE

1 Broken Rotor or Blades

Disassemble the end cover filter and end pump cover from rear of motor. Visually inspect the rotor and blades for breakage. Make sure that the rotor and blades are free of any type of lubricant. Rotor and blades must be clean and dry for proper operation.

2 Improper Rotor Clearance

Check rotor with feeler gauge for proper clearance between rotor and pump body. Rotate rotor and make sure all four quadrants of rotor have adequate clearance.

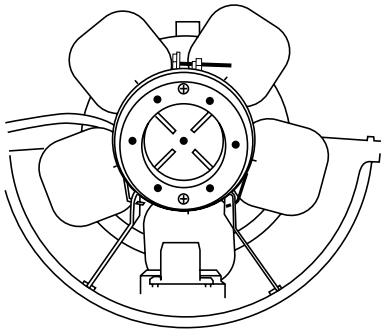

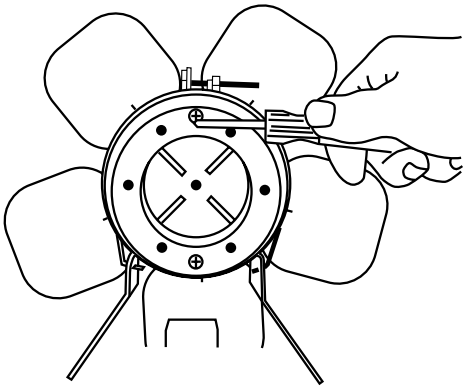

③ Oversized Rotor

If the fan is hard to turn when the motor end cover is installed, but easy to turn when loosened, the rotor should be removed and lightly sanded. Remove the rotor and lightly sand by placing rotor in the palm of hand and sanding on a flat surface making figure eight rotations. (Use the finest grade of sandpaper available).

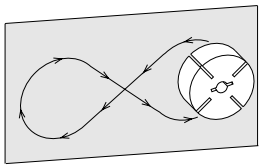

④ Dry Motor Bearing

If the fan is difficult to turn with air pump parts removed, apply 8 to 12 drops of a non-detergent oil to the sleeve bearing on the fan of the motor. The bearing located at the pump end is of the ball bearing type and should not be lubricated. DO NOT OIL PUMP END BEARING.

Note: Motor manufactured after 1978 have permanently lubricated sleeve bearing and cannot be oiled

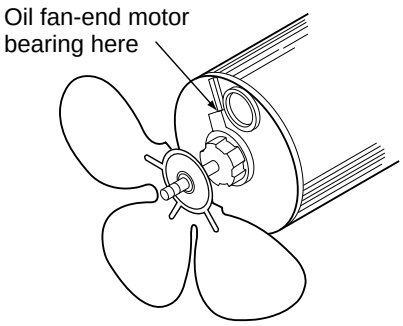

⑤ Open Motor Windings

Motors Without Relay (30,000, 35,000, 50,000, and 55,000 BTU)

With the heater disconnected from AC plug, connect the ohmmeter on the RX1 scale to the wires coming from motor. On smaller heaters, the leads from the motor should indicate a resistance of 6 to 8 ohms. Actual resistance varies between motor types.

Note: Resistances may vary due to motor temperature.

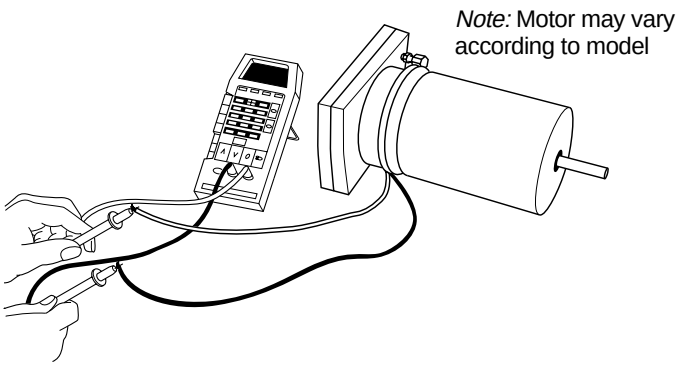

Motors with Relays (70,000, 100,000, 110,000, 150,000, 165,000, and 200,000 BTU)

Start Winding

Connect the ohmmeter on the RX1 scale to the white and black wires coming from motor. This procedure allows you to determine the condition of the start winding. If the meter indicates infinity (open circuit) or the meter goes full scale (zero ohms), the winding is defective and the motor must be replaced. Actual resistance varies between motor types.

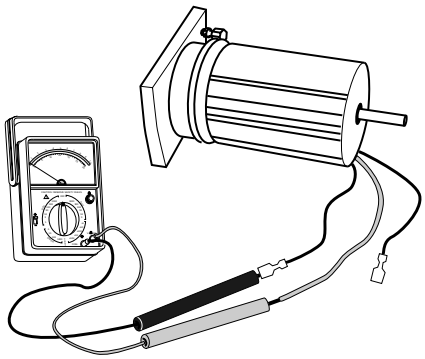

Main Winding

Connect the ohmmeter on the RX1 scale to the red and white wires coming from motor. If the needle does not move again or goes to full scale, the motor must be replaced. Actual resistance varies between motor types.

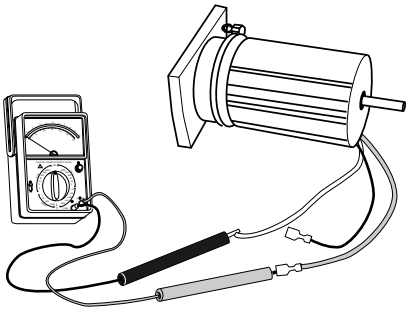

6 Defective Solid State Relay

Defective Solid State Relay

Prepare a jumper wire approximately 8" long with a male quick disconnect terminal at one end and a test probe at the other end. Disconnect the black wire coming from the motor that is connected to the solid state relay terminal. Connect this black wire to the male connection of jumper wire. Touch the test probe to the opposite terminal of the solid state relay and plug in the heater. As soon as the motor reaches speed, remove the test probe from terminal. The motor should continue to run. If the motor operates correctly, the solid state relay should be replaced.

CAUTION: DO NOT TOUCH ELECTRICAL CONNECTIONS OR ALLOW THEM TO TOUCH METAL PARTS OF THE HEATER.

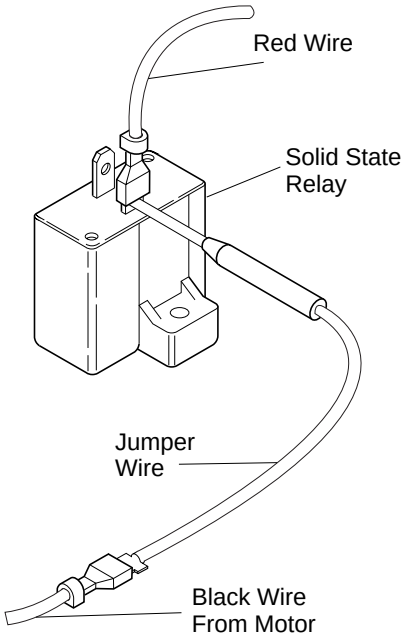

7 Low Voltage to Heater

In certain circumstance, a heater may operate correctly when being tested in the service shop, but the customer complains that it does not start at times on the job site. It is important that the customer is made aware that if the heater is operated on an incorrectly sized extension cord or a low voltage outlet, the heater's motor will not start due to low voltage. If the customer has the availability of a voltmeter, have the customer check the voltage at the heater. A minimum of 108 volts, while the heater is running, is necessary for proper operation. Refer to the Electrical Section of this manual (page 5) for proper extension cord sizing.

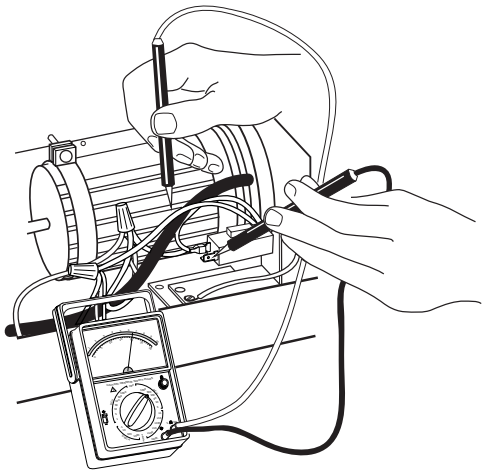

OBSERVED FAULT

Heater Does Not Start/Motor and Transformer/Ignitor Does Not Operate

Possible Causes External to Heater

- Check for Broken or Frayed Wires on Cord
- If External Thermostat is Used, Plug Heater directly to AC Source

Possible Causes Internal to Heater

1. Check That Reset Button on Safety Control is Fully Depressed
2. Check Wiring Connections at Safety Control and Wire Nuts for Proper Fit
3. Check for Continuity of Circuit Breaker

TEST PROCEDURE

1 Check That Reset Button on Safety Control is Fully Depressed

Visually inspect the black reset button on safety control. The button must be fully depressed and latched in for operation.

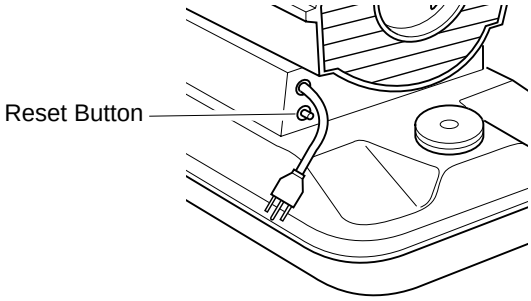

2 Check Wiring Connections at Safety Control and Wire Nuts for Proper Fit.

Wire Nuts

Physically check electrical connections at wire nuts and safety control for proper fit. Check for continuity between male prongs of power cord to safety control.

Terminal Board

Make sure connections are secure.

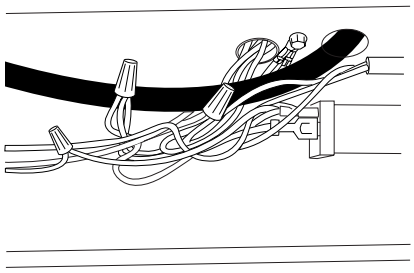

③ Check for Continuity of Circuit Breaker

A. Standard Safety Control (098205-04)

With the heater disconnected from AC source, disconnect the red and black wires connected to the safety control. Push reset button in. With the ohmmeter on the 0 to 200 OHM scale, check for continuity across terminals where wires were removed. Meter should indicate “0”.

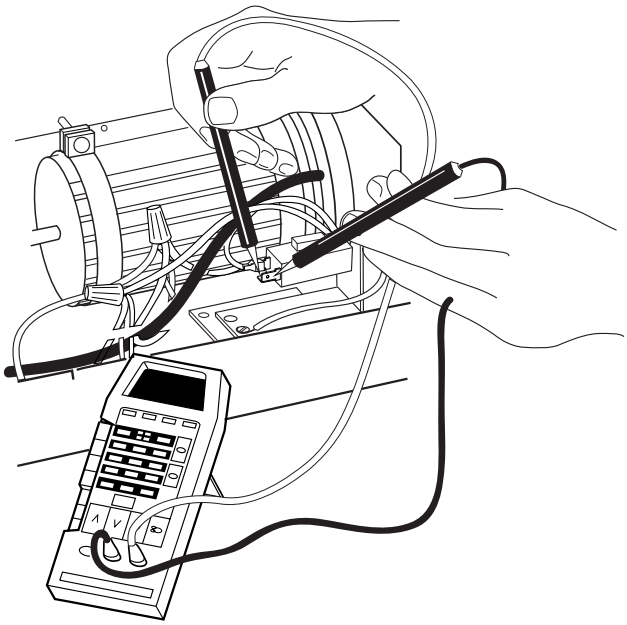

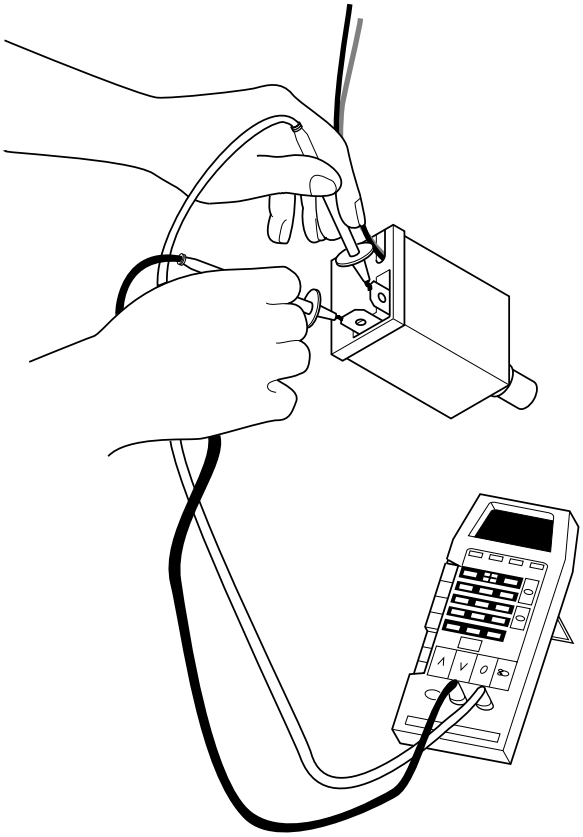

OBSERVED FAULT

Heater Ignites and Burns; However, Safety Control Trips and Heater Shuts Off

Safety Control Trips out Within the First Minute of Operation

1. Defective Safety Control
2. Defective Photocell
3. Loose Wire Nut or Terminal Board Connection

Safety Control Trips out After Several Minutes of Operation

4. Dirty Photocell
5. Check for Proper Pump Pressure
6. Check for Restricted Fuel Flow Due to:
   A. Seal Leak
   B. Fuel Filter Blocked
   C. Restriction in Nozzle of Burner Head
7. Fuel Cap and Gasket Not Vented
8. Fuel Cap has More than one Gasket

TEST PROCEDURE

1 Defective Safety Control

(098205-04)

Make sure unit is disconnected from AC source. Disconnect the blue wire coming from safety control that is connected to blue wire at photocell (connection is made in smaller wire nut connection).

Connect the blue wire from control under the wire nut connection where the white wires are connected. Plug unit into AC supply. If the reset button on the safety control pops out and unit shuts off, the control is defective and must be replaced.

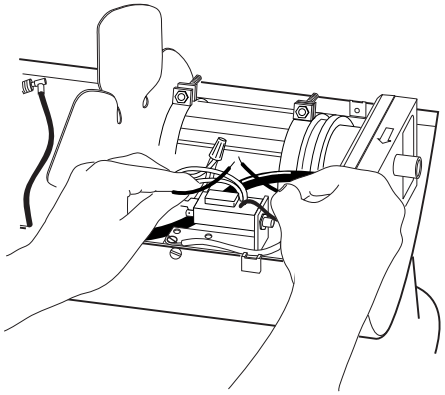

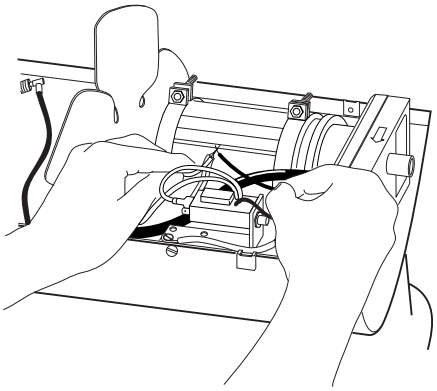

② Defective Photocell

Inspect the lens of the photocell for soot/dirt, etc... If dirty, wipe off with a clean, damp cloth.

Remove photocell from heater and connect ohmmeter on the 1000 Ohm (RX1K) scale. Hold the lens up to a light source (60 watt light bulb, direct sunlight, etc.) with the lens of the photocell pointed toward the light source. The resistance of the meter should be low (less than 500 ohms).

By blocking off the light source by putting thumb over opening of photocell, the resistance on meter should be high. Replace the photocell if a change in resistance is not observed during the above test.

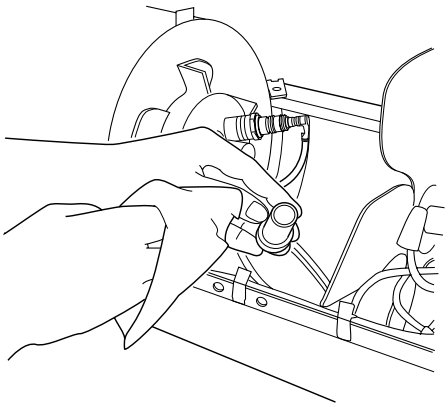

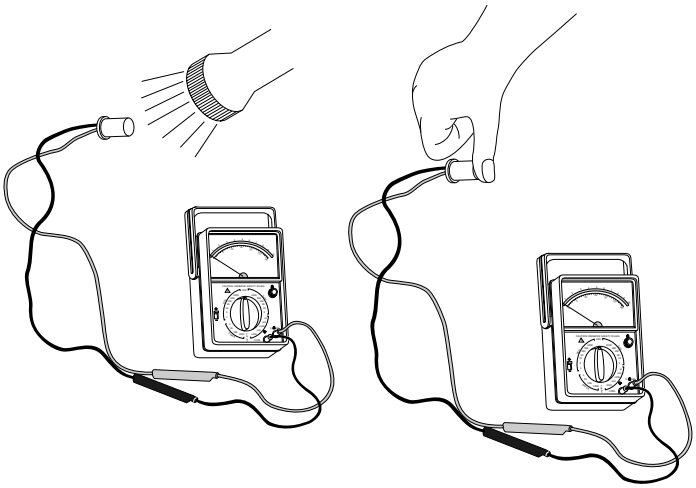

③ Loose Wire Nut or Terminal Board Connection

Physically check that all electrical connections are secure and making electrical contact.

④ Dirty Photocell

See step #2, column 1.

⑤ Check for Proper Pump Pressure

Install HA1180 Pressure Gauge or equivalent to rear of air filter housing. Start heater and adjust air pressure to specified pressure. Turning adjustment screw clockwise increases pressure, counterclockwise decreases pressure. The screwdriver must be removed from the slot after any adjustment before taking a reading on the gauge. (See *Heater Performance Specifications* on page 6 for specified pressures).

Note: Pressure gauge must be scaled in 1/4 pound increments for accurate measurement.

⑥ Check for Restricted Fuel Flow

Remove the burner head from heater. Using a socket wrench, carefully remove the nozzle from burner head. (Be extremely careful not to scratch or score the face of the nozzle).

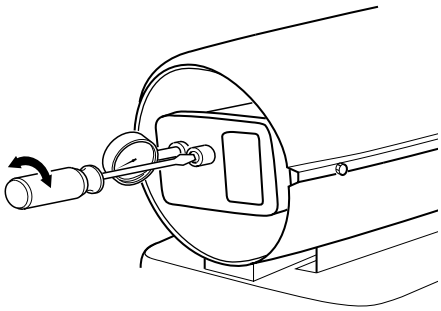

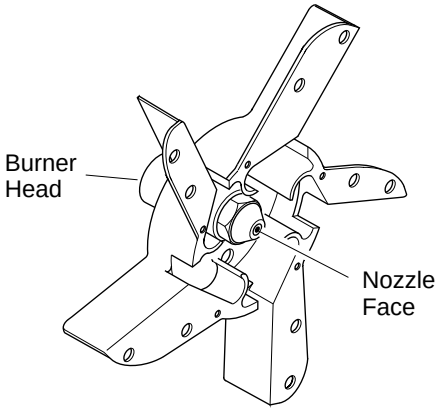

Restricted Fuel Flow cont.

A. Seal Leak

Remove the rubber seal washer from stem of nozzle and discard. (To be safe, always replace nozzle sleeve during servicing of burner head). Even the smallest air leak in this area can reduce flow rates and result in problems.

Note: On smaller heaters (30,000 thru 55,000 BTU), inspect “O” ring, do not remove.

Install a new rubber seal to stem of nozzle. Make sure the seal washer, spring and second seal washer are in place before reinstalling nozzle in the burner head.

B. Fuel Filter Clogged

Clean or replace fuel filter as necessary.; filter is located at lower end of fuel pickup tube on 30 thru 70 and 200 models. Filter is located on top of fuel tank on 100 thru 165 models. On 200 model the filter is located at the end of fuel line inside fuel tank.

C. Restriction in Nozzle or Burner Head

Using a compressed air source, blow the compressed air through the outlet end of nozzle to dislodge any possible restriction.

CAUTION: NEVER DRILL OUT OR TRY TO INCREASE NOZZLE SIZE.

Using compressed air, also blow through passages in burner head. The air should be directed from input fitting at rear of head to the center of burner head. Many times the restriction to the flow is due to metal chips, etc. being present in the burner head assembly.

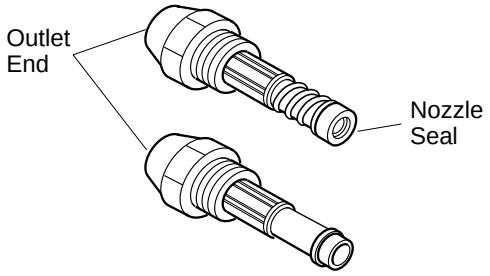

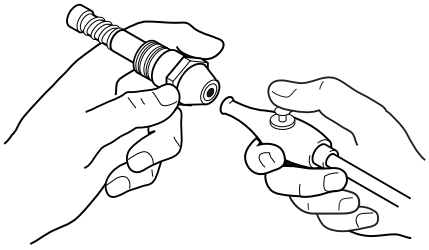

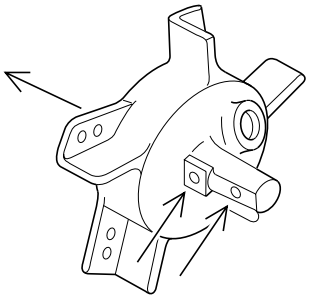

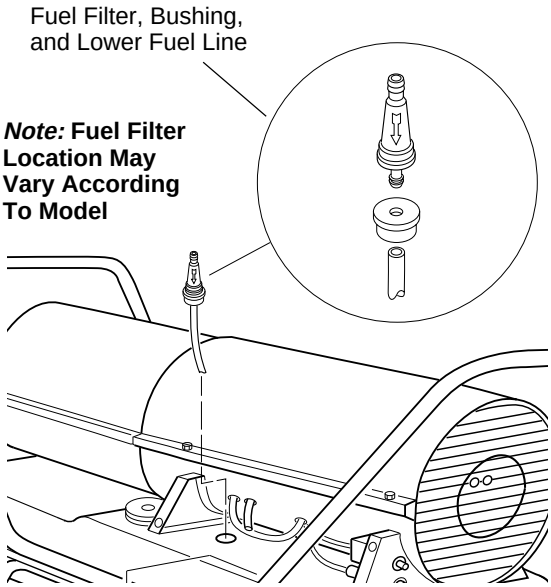

7 Fuel Cap and Gasket Not Vented

Inspect the vent hole and gasket under the fuel cap to make sure the passage is open. Remember that since the fuel is being drawn from the tank, the tank must be vented for proper operation.

8 Fuel Cap Has More Than One Gasket

Make sure cap has only one gasket installed.

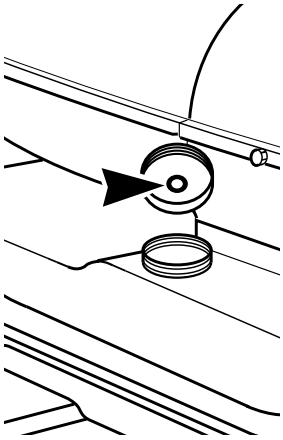

OBSERVED FAULT

Frequent Plug Fouling/ Delayed Igniton

1. Spark Plug Too Close to Spray Pattern of Nozzle
2. Wrong Fuel

TEST PROCEDURE

1 Spark Plug Too Close to Spray Pattern of Nozzle

It may be necessary in some cases to move the spark plug back from spray pattern of nozzle. The best method is to shim the plug back by placing a standard spark plug washer under the flat of the plug at threaded area. This moves the plug back approximately .1 inch and reduces the possibility of the plug fouling with carbon or the plug becoming wet during the ignition cycle.

2 Wrong Fuel

Refer to *Fuel Selection* on page 5 of this manual.

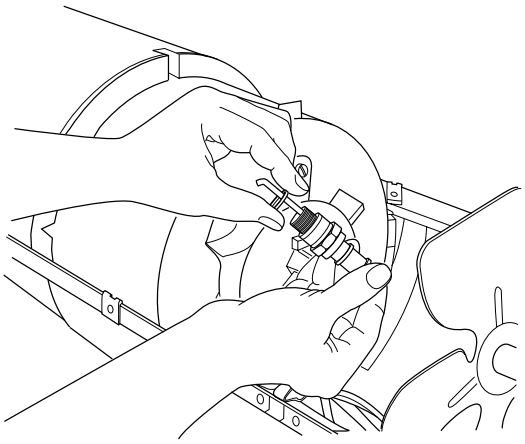

DIAGRAMS AND CHARTS

I. WIRING DIAGRAMS

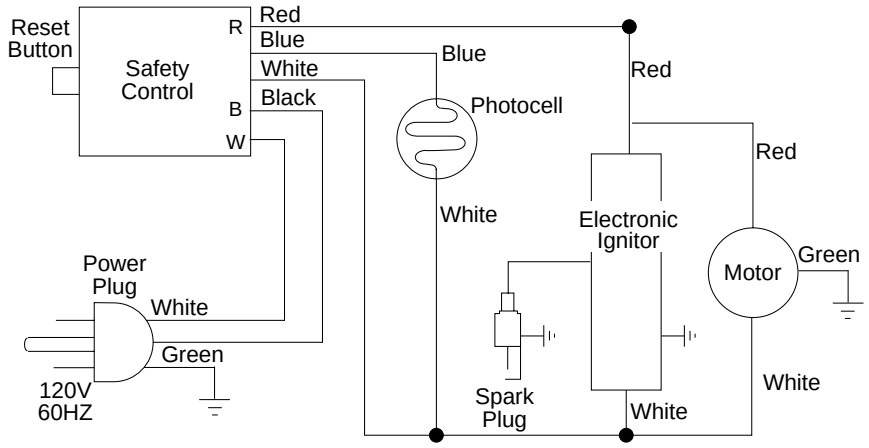

30,000, 35,000, 50,000, & 55,000 BTU Heaters

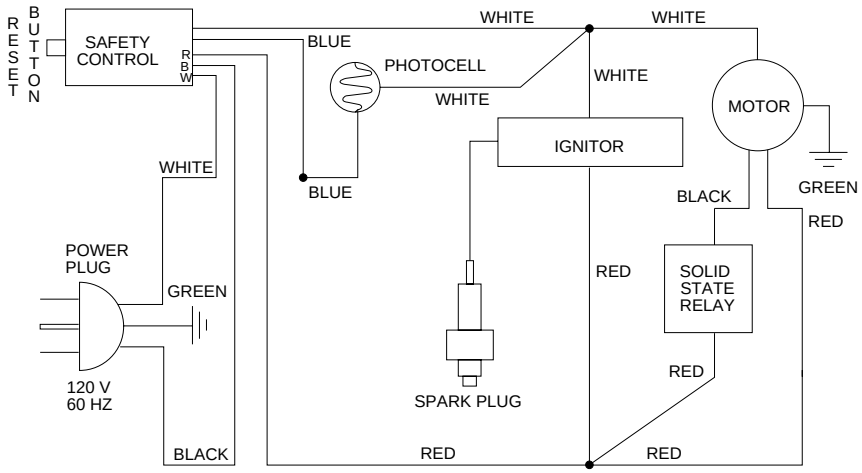

70,000 - 200,000 BTU Heaters - Heaters Equipped With Solid State Relay

II. MOTOR RESISTANCE CHART

	OHMS	
MOTOR	**RED TO WHITE MAIN (± 7%)**	**BLACK TO WHITE AUXILIARY (± 7%)**
100088-01	6.2	—
097130-02	7.5	16.5
097134-02	3.5	18.3
101898-01	2.8	9.1

DESA
INTERNATIONAL
Technical Service Department
P.O. Box 90004
2701 Industrial Drive
Bowling Green, Kentucky 42102
www.desatech.com

079337 01

NOT A UPC

079337-01
Rev. D
08/00